shindaiwa

PARTS PRICE LIST

C2510

Shindaiwa Corporation

6-2-11,Ozuka-Nishi, Asaminami-ku, Hiroshima, 731-3167, Japan
Telephone (082) 849-2005 Fax (082) 849-2481

C2510／EC2
MAR. 2, 2009
Printed in Japan

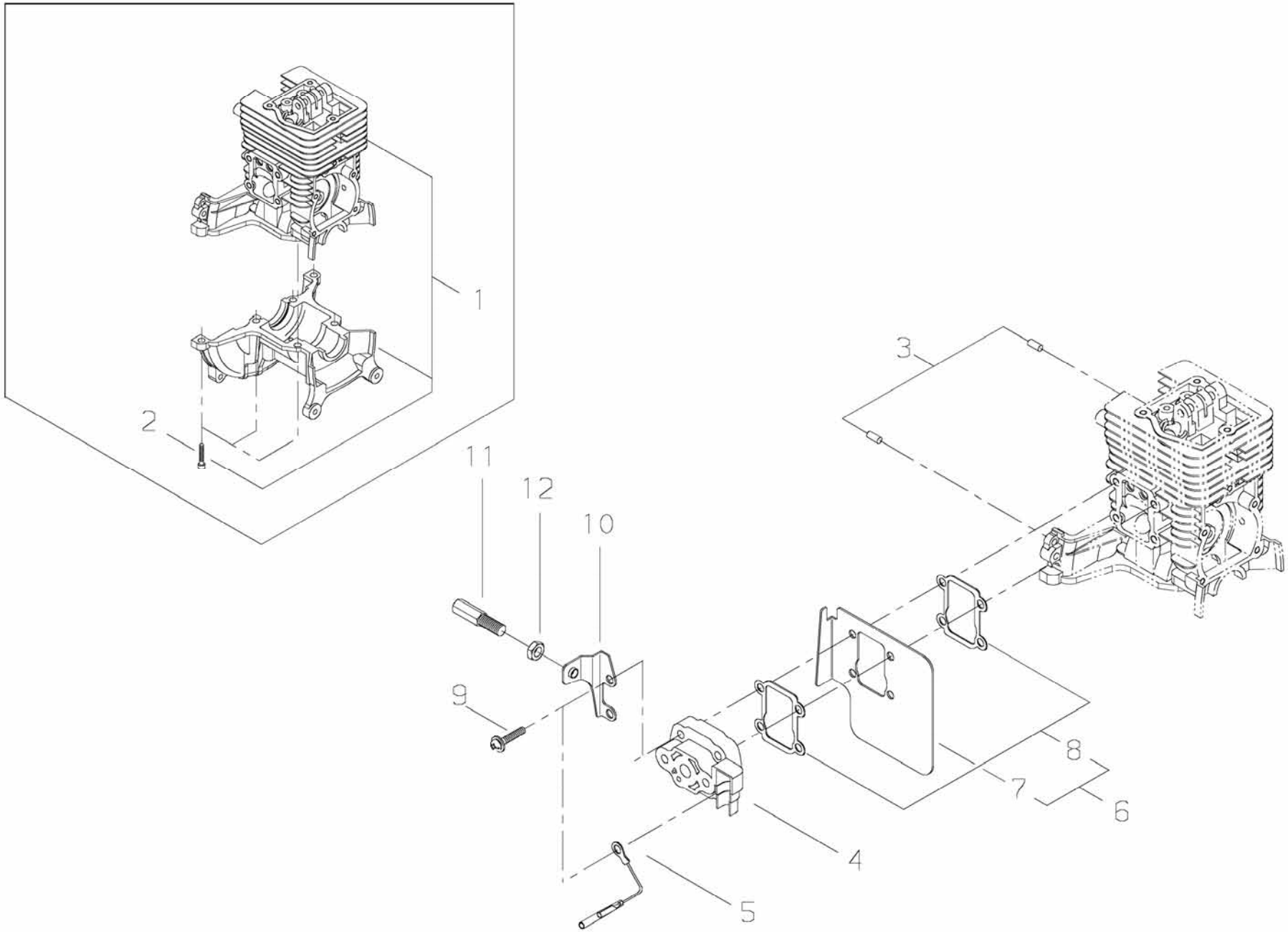
1
2
3
11
12
10
9
8
7
6
4
5

PRICE:($)

Ref. No.	Part No.	Part Name	Q`ty	Unit Price($)	Remarks
1-1	60908-98330	CYLINDER BLOCK SET	1		
2	01020-05160	*BOLT	6		M5x16
3	12492-40080	ROLLER	2		E4X8F6 C3
4	62902-12310	REED VALVE	1		
5	14350-01101	LEAD WIRE	1		L110
6	62902-12320	BAFFLE PLATE COMP	1		
7	62901-12320	*BAFFLE PLATE	1		
8	62901-12220	*GASKET	2		
9	11206-05225	SCREW,PM-SPW	4		M5x22
10	62901-83310	BRACKET	1		
11	62902-83310	CABLE ADJUSTER	1		
12	01501-06048	NUT	1		M6

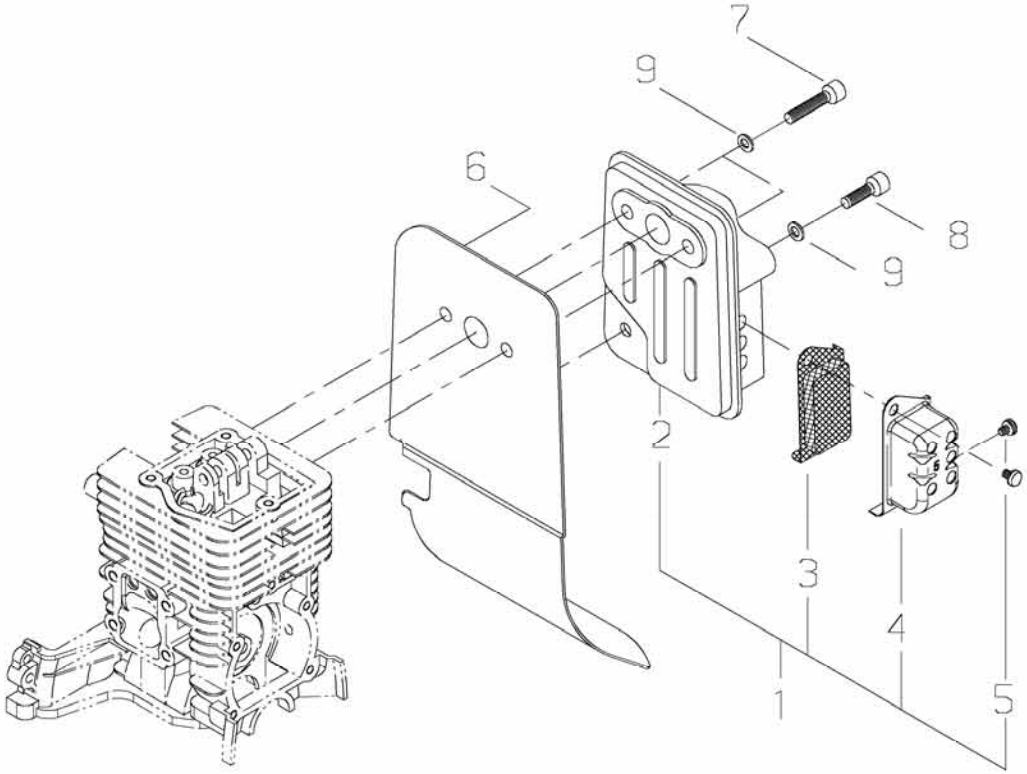
7
9
6
8
9
2
3
4
1
5

PRICE:($)

Ref. No.	Part No.	Part Name	Q`ty	Unit Price($)	Remarks
2-1	62907-15011	MUFFLER ASSY	1		
2	62907-15111	*MUFFLER	1		
3	62902-15131	*SCREEN	1		
4	62907-15161	*TAIL PLATE	1		
5	11204-04060	*SCREW,PM-SW	2		M4x6
6	62901-15210	GASKET	1		
7	62901-15310	BOLT	2		
8	01020-05160	BOLT	1		M5x16
9	01610-05080	WASHER	3		5mm

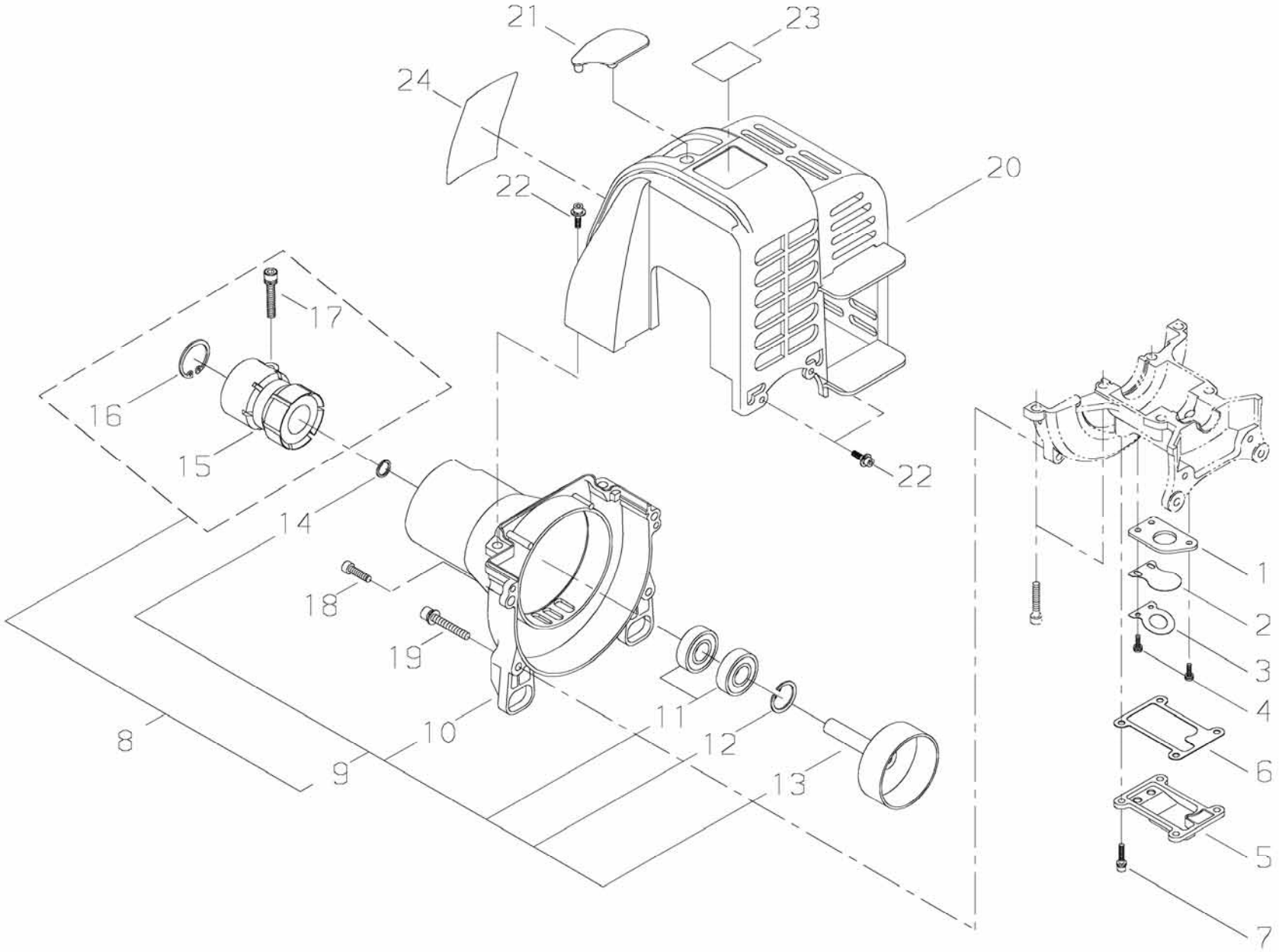
21
23
24
20
22
17
16
15
14
22
18
19
1
2
3
4
6
5
7
8
9
10
11
12
13

PRICE:($)

Ref. No.	Part No.	Part Name	Q`ty	Unit Price($)	Remarks
3-1	62901-21320	INSULATOR	1		
2	72320-83121	VALVE	1		
3	72320-83132	STOPPER	1		
4	01211-03100	SCREW-SW	3		M3x10
5	62901-21120	COVER	1		
6	62901-21130	GASKET	1		
7	11022-04120	BOLT-SPW	4		M4x12
8	60902-98023	FAN COVER ASSY	1		
9	62901-31013	FAN COVER COMP	1		
10	62901-31112	*FAN COVER	1		
11	02002-06000	*BALL BEARING	2		6000ZZ
12	02432-26120	*SNAP RING	1		26mm C
13	62100-31210	*CLUTCH DRUM	1		
14	22000-13320	*SNAP RING	1		
15	20087-31411	*JOINT	1		
16	02432-40170	*SNAP RING	1		40mm C
17	11020-05220	*BOLT-SW	1		M5x22
18	01020-05160	BOLT	2		M5x16
19	11022-05450	BOLT-SPW	2		M5x45
20	62901-32111	CYLINDER COVER	1		
21	62901-32312	GROMMET	1		
22	11024-04160	BOLT-SLPW	4		M4x16
23	62911-91320	LABEL,TRADE	1		
24	19420-00106	LABEL,TRADE	1		shindaiwa、C4

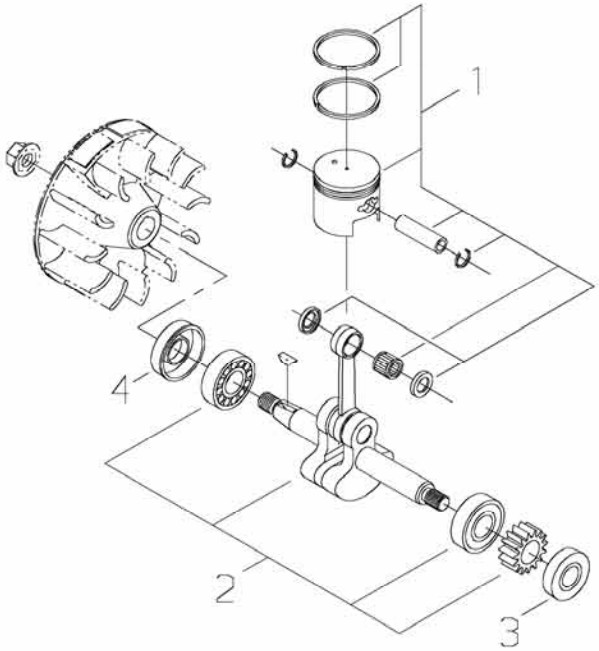
1
4
2
3

PRICE:($)

Ref. No.	Part No.	Part Name	Q`ty	Unit Price($)	Remarks
4-1	62902-41310	PISTON SET	1		
2	62902-42020	CRANKSHAFT COMP	1		
3	62901-42260	OIL SEAL	1		
4	62901-42270	OIL SEAL	1		

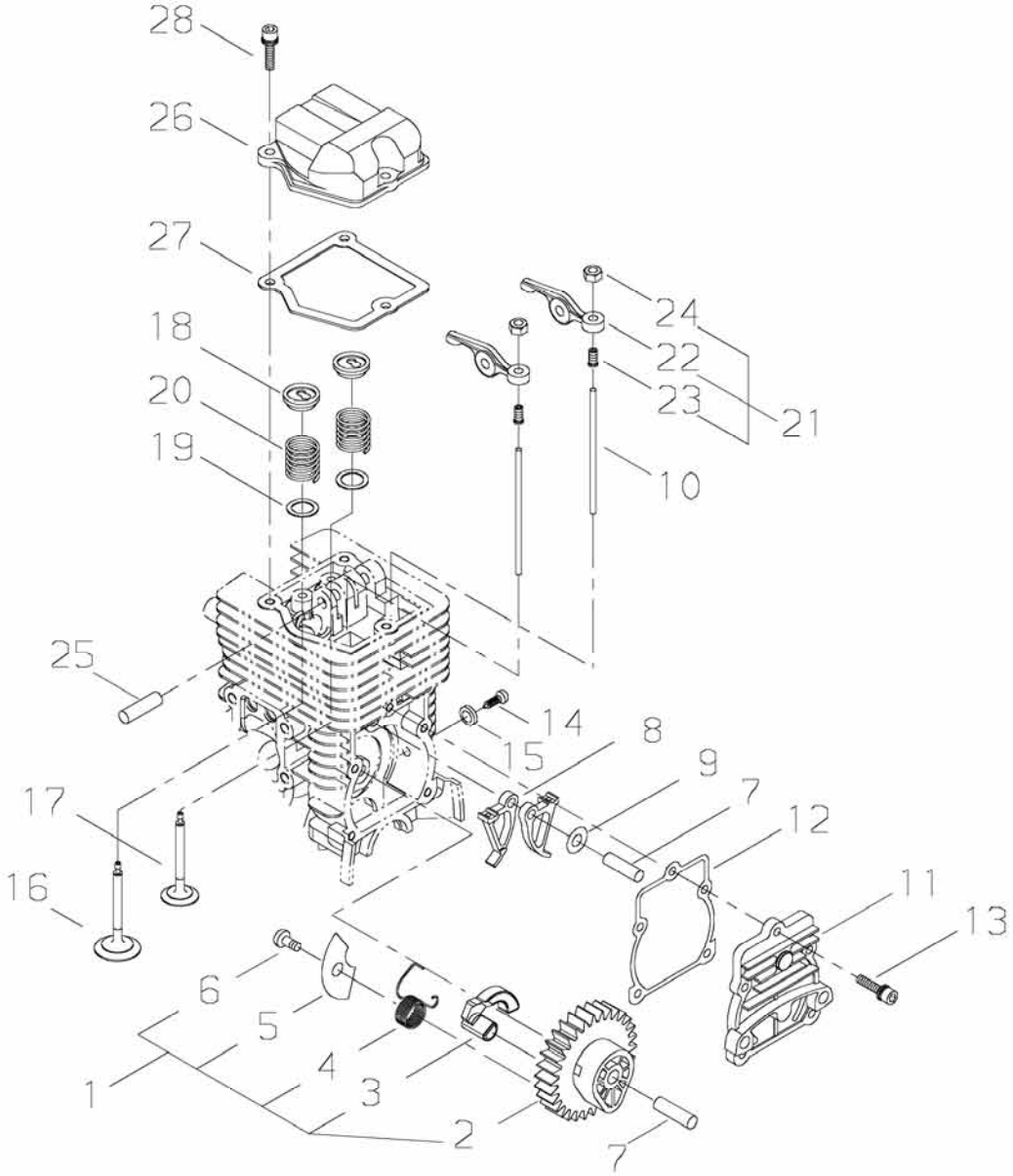
28
26
27
18
20
19
24
22
23
21
10
25
14
15
8
9
7
12
17
16
11
13
6
5
4
3
1
2
7

PRICE:($)

Ref. No.	Part No.	Part Name	Q`ty	Unit Price($)	Remarks
5-1	62905-43011	CAM GEAR ASSY	1		
2	62902-43310	*CAM GEAR	1		
3	62907-43120	*WEIGHT	1		
4	17520-08900	*COIL SPRING	1		
5	62905-43131	*PLATE	1		
6	01280-04062	*SCREW,TAPPING	1		4x6
7	12492-50290	ROLLER	2		N5X29.8F6-C3
8	62907-43210	LIFTER	2		
9	11620-10000	WASHER	1		5mm
10	62908-43220	PUSH ROD	2		
11	62901-43330	CAM GEAR COVER	1		
12	62901-43240	GASKET	1		
13	11022-04140	BOLT-SPW	5		M4x14
14	62901-43310	SCREW	1		
15	15401-10028	COLLAR	1		φ10xφ5.5xL2
16	62902-44111	INTAKE VALVE	1		
17	62902-44121	EXHAUST VALVE	1		
18	62908-44140	RETAINER	2		
19	62908-44310	PLATE	2		
20	62901-44130	VALVE SPRING	2		
21	62907-44010	ROCKER ARM ASSY	2		
22	62901-44210	*ROCKER ARM	2		
23	62907-44220	*ADJUST SCREW	2		
24	62901-44231	*NUT	2		
25	12492-50310	ROLLER	1		NTN F5X31.8
26	62901-44241	ROCKER ARM COVER	1		
27	62901-44250	GASKET	1		
28	11022-04140	BOLT-SPW	3		M4x14

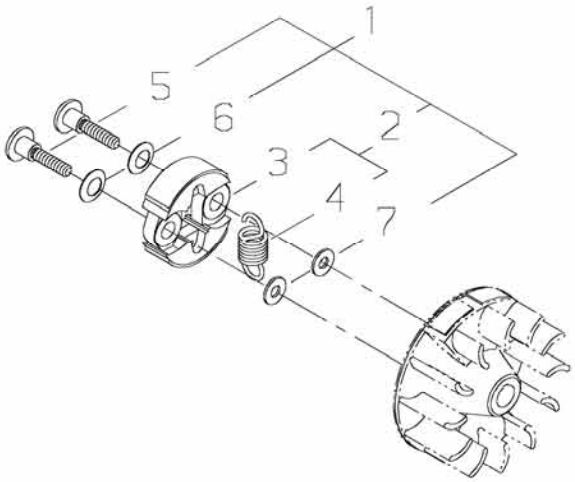
1
5
6
2
3
4
7

PRICE:($)

Ref. No.	Part No.	Part Name	Q`ty	Unit Price($)	Remarks
6-1	62901-51012	CLUTCH SET	1		
2	62901-51022	*CLUTCH SHOE ASSY	1		
3	70140-51113	**CLUTCH SHOE	2		
4	62901-51310	**COIL SPRING	1		
5	20087-51210	*BOLT	2		
6	20087-51231	*SPRING PLATE	2		
7	22100-71430	*WASHER	2		

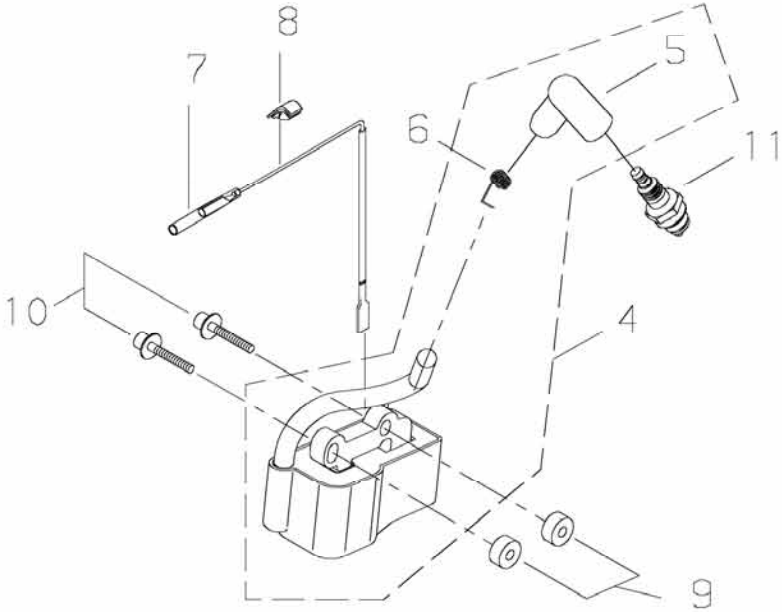
8
7
5
6
11
10
4
9

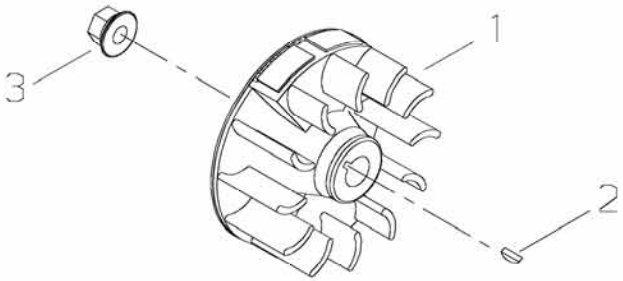
1
3
2

PRICE:($)

Ref. No.	Part No.	Part Name	Q`ty	Unit Price($)	Remarks
7-1	62905-71110	ROTOR	1		
2	02403-03100	KEY	1		3x10
3	20035-71220	NUT	1		
4	62905-71310	COIL ASSY	1		
5	62905-71250	*PLUG CAP	1		
6	62905-71320	*COIL SPRING	1		
7	14350-02001	LEAD WIRE	1		
8	62901-71310	GROMMET	1		
9	70030-71620	INSULATOR	2		
10	11024-04265	BOLT-SLPW	2		M4x26
11	13001-10005	SPARK PLUG	1		CMR5H

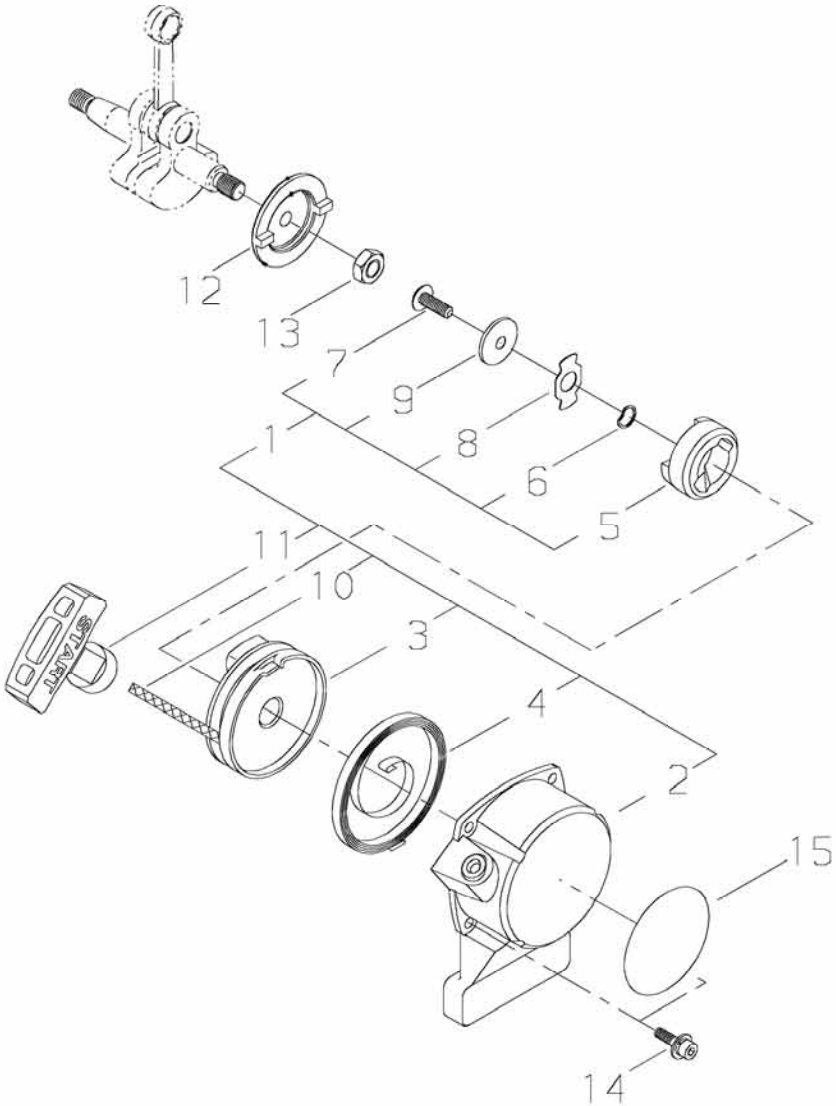
12
13
7
9
1
8
6
5
11
10
3
4
2
15
14
START

PRICE:($)

Ref. No.	Part No.	Part Name	Q`ty	Unit Price($)	Remarks
8-1	62901-75012	RECOIL STARTER ASSY	1		
2	62901-75111	*STARTER CASE	1		
3	62901-75120	*REEL	1		
4	70064-75130	*RECOIL SPRING	1		
5	62901-75310	*DOG	1		
6	70064-75150	*WAVE WASHER	1		
7	72933-75160	*SCREW	1		
8	72933-75170	*RETAINER	1		
9	72933-75180	*WASHER	1		
10	32004-75140	*ROPE	1		
11	32004-75150	*KNOB	1		
12	70064-75310	STARTER PULLEY	1		
13	01511-08051	NUT	1		M8
14	11024-04160	BOLT-SLPW	2		M4x16
15	19420-00070	LABEL,TRADE	1		shindaiwa、C4

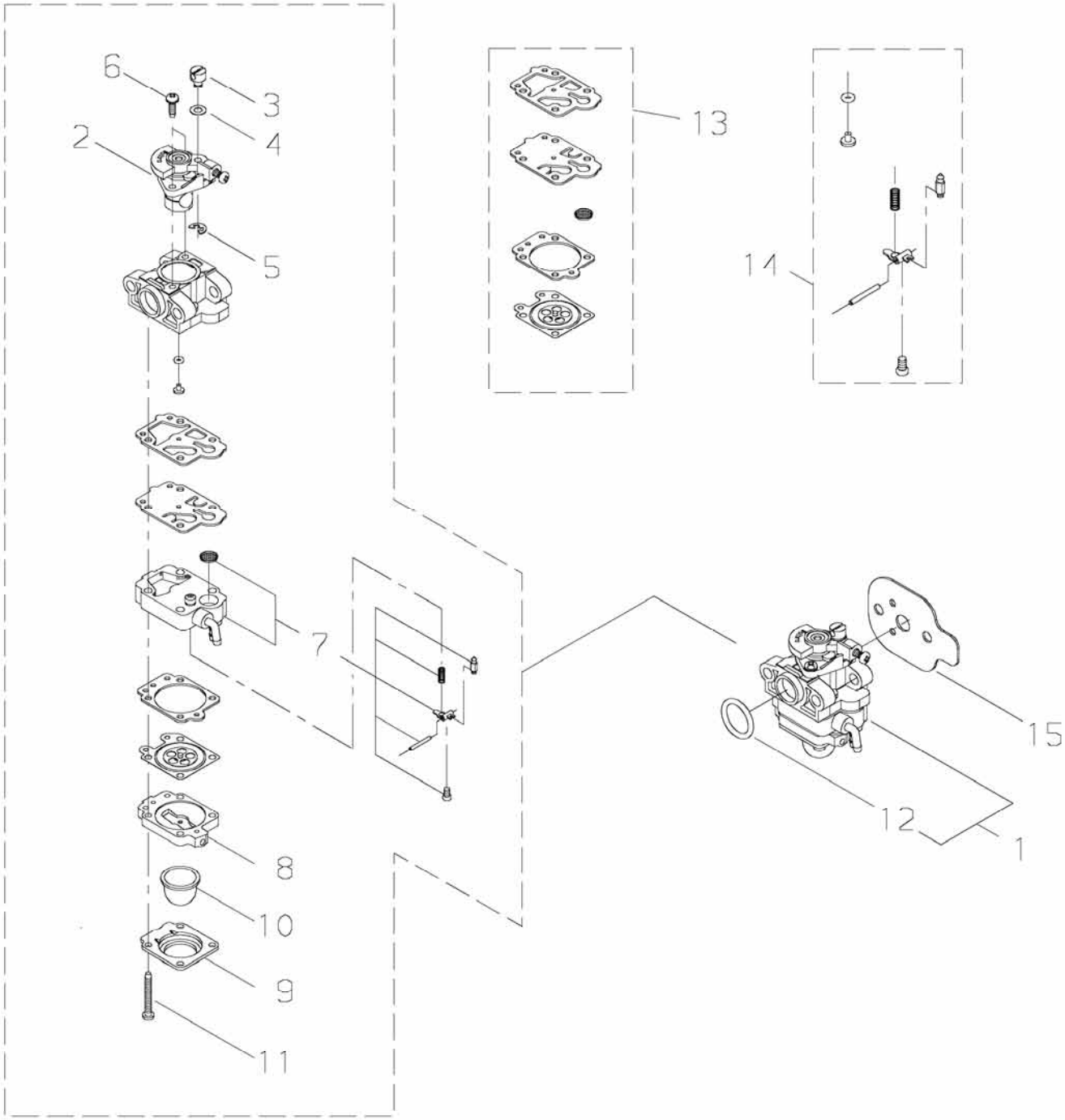
6
3
4
2
5
13
14
7
15
12
1
8
10
9
11

PRICE:($)

Ref. No.	Part No.	Part Name	Q`ty	Unit Price($)	Remarks
9-1	62908-81011	CARBURETOR ASSY	1		
2	62908-81311	*VALVE	1		
3	72933-81450	*SWIVEL	1		
4	20089-81185	*WASHER	1		
5	20036-81195	*E RING	1		
6	70064-81290	*SCREW	2		
7	37013-81350	*PUMP BODY ASSY	1		
8	20016-81420	*PUMP BASE COMP	1		
9	20016-81510	*PUMP COVER	1		
10	20036-81670	*PRIMER PUMP	1		
11	20016-81140	*SCREW	4		
12	20016-81250	*O RING	1		
13	60902-98030	GASKET	1		
14	60908-98360	VALVE SET	1		
15	62901-81211	GASKET	1		

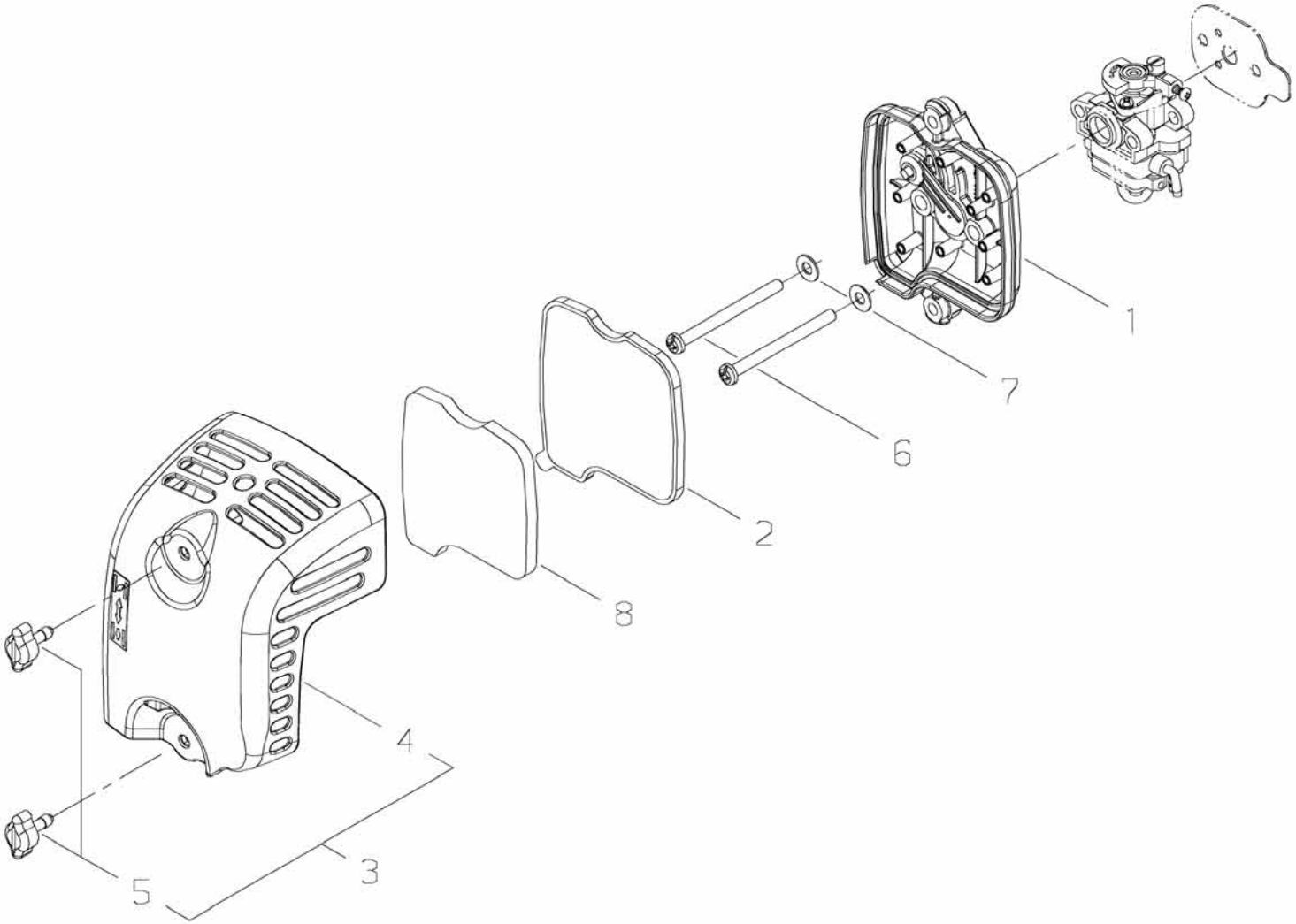
1
2
3
4
5
6
7
8

PRICE:($)

Ref. No.	Part No.	Part Name	Q`ty	Unit Price($)	Remarks
10-1	62908-82010	CLEANER BODY ASSY	1		
2	62908-82120	FILTER	1		
3	62908-82030	CLEANER COVER ASSY	1		
4	62908-82130	*CLEANER COVER	1		
5	62901-82330	*KNOB	2		
6	11203-05605	SCREW,PM	2		M5x60
7	01613-05080	WASHER	2		5mm
8	62908-82310	PREFILTER	1		

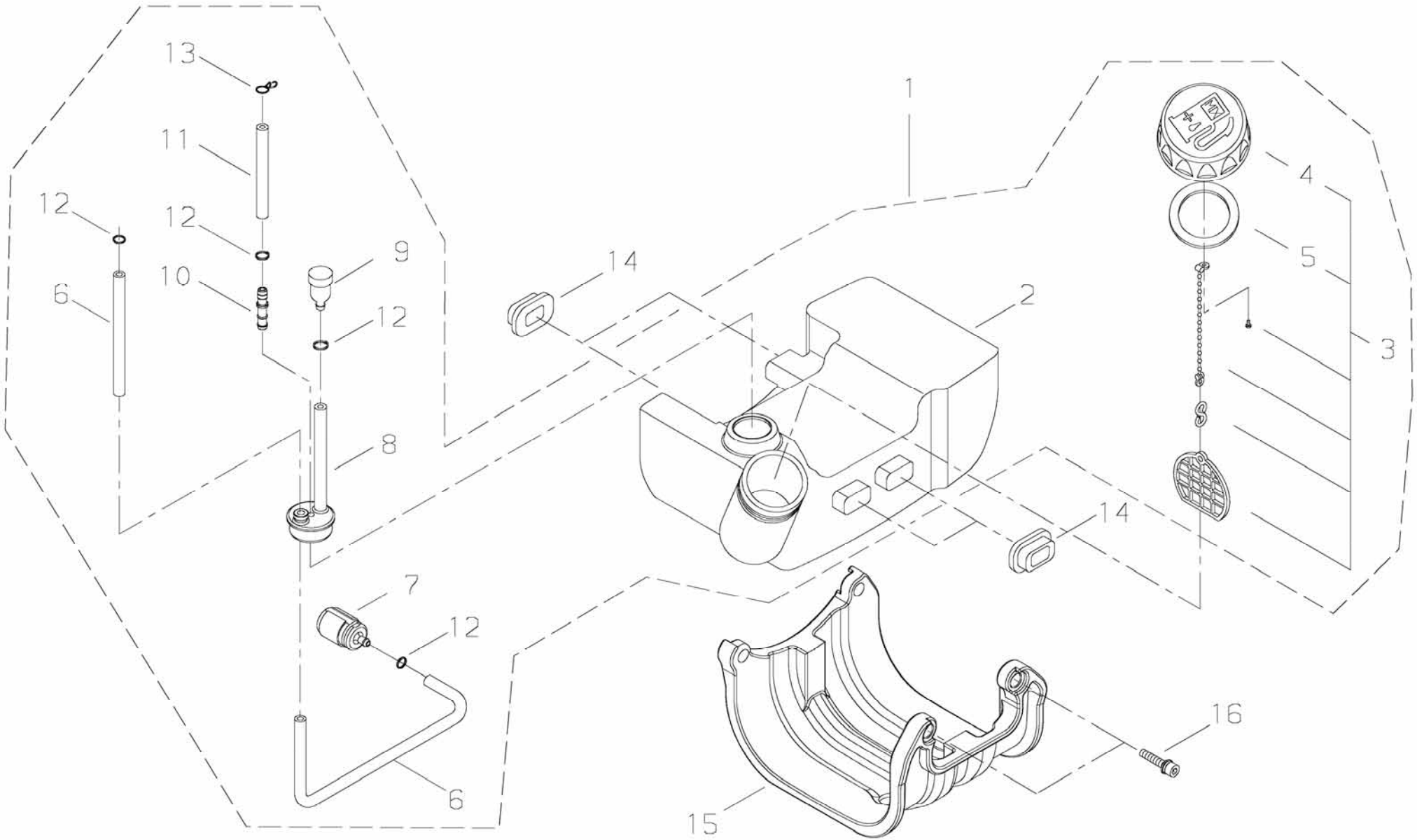
13
11
12
12
10
9
12
6
8
7
12
6
14
1
2
4
5
3
14
16
15

PRICE:($)

Ref. No.	Part No.	Part Name	Q`ty	Unit Price($)	Remarks
11-1	68906-85310	FUEL TANK ASSY	1		
2	62901-85110	*FUEL TANK	1		
3	70168-85201	*FUEL CAP ASSY	1		
4	70168-85210	**FUEL CAP	1		
5	20000-85221	**GASKET	1		
6	62901-85310	*FUEL PIPE	1		
7	20016-85400	*FUEL FILTER	1		
8	20112-85351	*GROMMET	1		
9	22197-33960	*VALVE	1		
10	72933-85620	*JOINT	1		
11	68906-85320	*PIPE	1		
12	20020-85540	*CLIP	4		
13	37013-85310	*CLIP	1		
14	62901-85220	TANK CUSHION	4		
15	62902-85320	TANK GUARD	1		
16	11022-05200	BOLT-SPW	2		M5x20

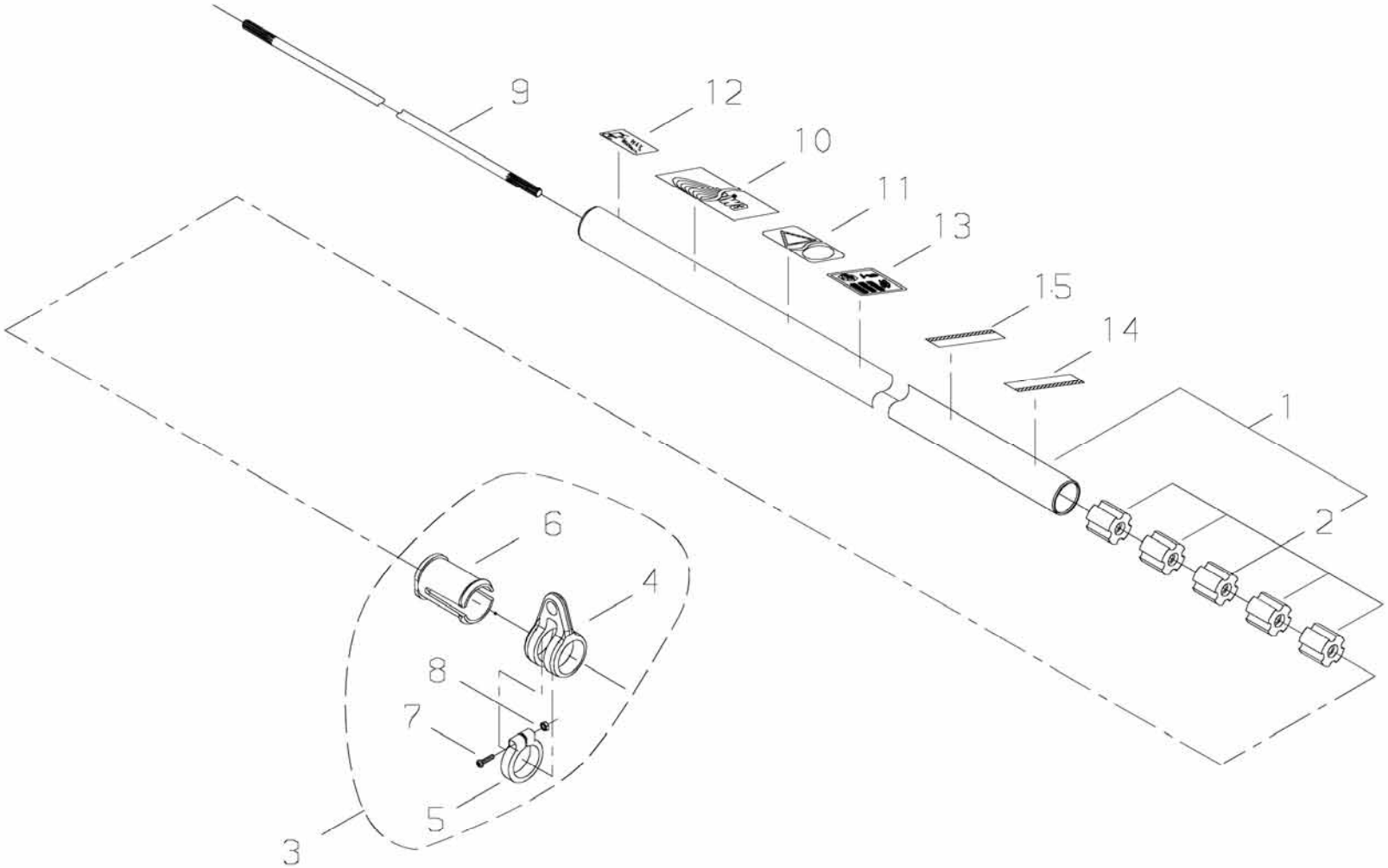
9
12
10
11
13
15
14
1
2
6
4
8
7
5
3

PRICE:($)

Ref. No.	Part No.	Part Name	Q`ty	Unit Price($)	Remarks
12-1	63901-62010	OUTER PIPE COMP	1		
2	22035-12121	*BUSH	5		
3	33008-62340	HANGER ASSY	1		
4	33008-62151	*HANGER	1		
5	33008-62311	*CLAMP	1		
6	33008-62321	*COLLAR	1		
7	11203-04160	*SCREW,PM	1		M4x16
8	01500-04031	*NUT	1		M4
9	22070-12410	MAIN SHAFT	1		
10	19420-00084	LABEL,TRADE	1		shindaiwa,PROFESSIONAL
11	19402-00090	LABEL,CAUTION	1		
12	19402-00223	LABEL,CAUTION	1		MAX 8500MIN-1
13	19404-00036	LABEL,DECIBEL	1		111dB(A)
14	72005-12140	CAUTION PLATE	1		
15	72017-12150	HANDLE LABEL	1		

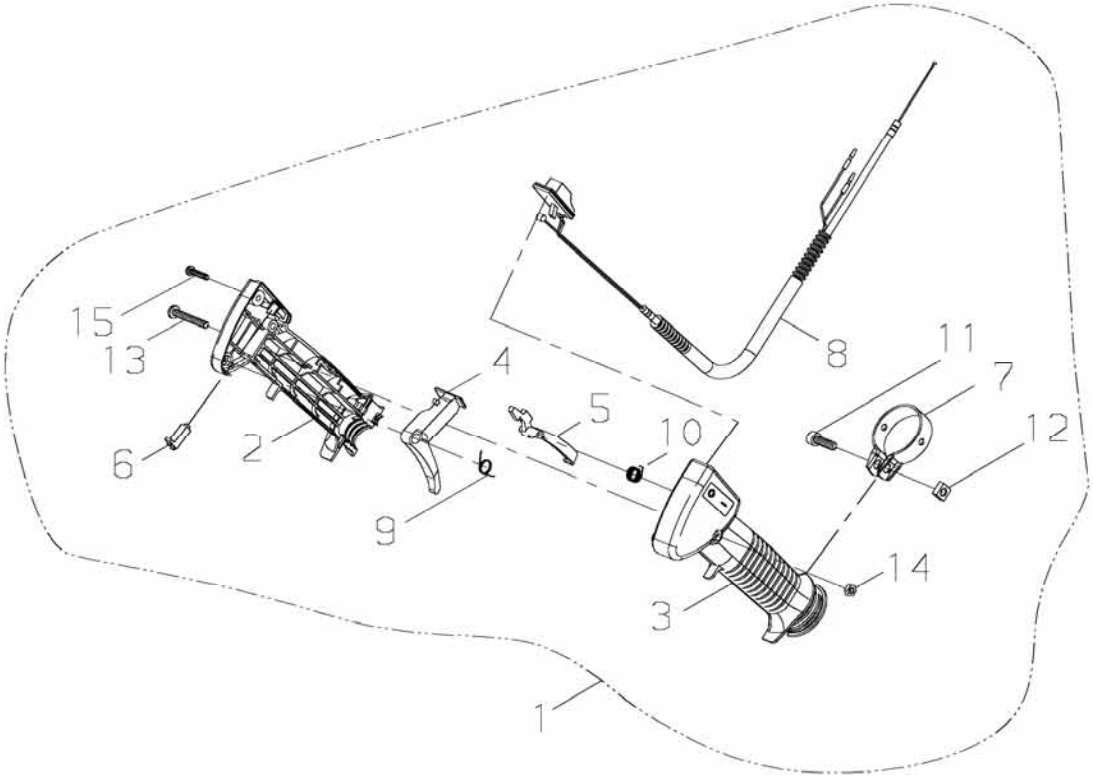
15
13
6
2
4
9
5
10
8
11
7
12
14
3
1

PRICE:($)

Ref. No.	Part No.	Part Name	Q`ty	Unit Price($)	Remarks
13-1	64012-64250	THROTTLE LEVER ASSY	1		
2	72431-14510	*BODY,RIGHT	1		
3	72431-14520	*BODY,LEFT	1		
4	72451-14530	*LEVER	1		
5	72451-14540	*LOCK LEVER	1		
6	72451-14550	*BUTTON	1		
7	72451-14560	*CLAMP	1		
8	64012-64310	*THROTTLE CABLE COMP	1		
9	72451-14580	*RETURN SPRING	1		
10	72451-14590	*SPRING	1		
11	01020-06200	*BOLT	1		M6*20
12	72451-14610	*NUT	1		
13	11203-05351	*SCREW,PM	1		
14	72451-14630	*NUT	1		
15	72451-14620	*SCREW,TAPPING	1		

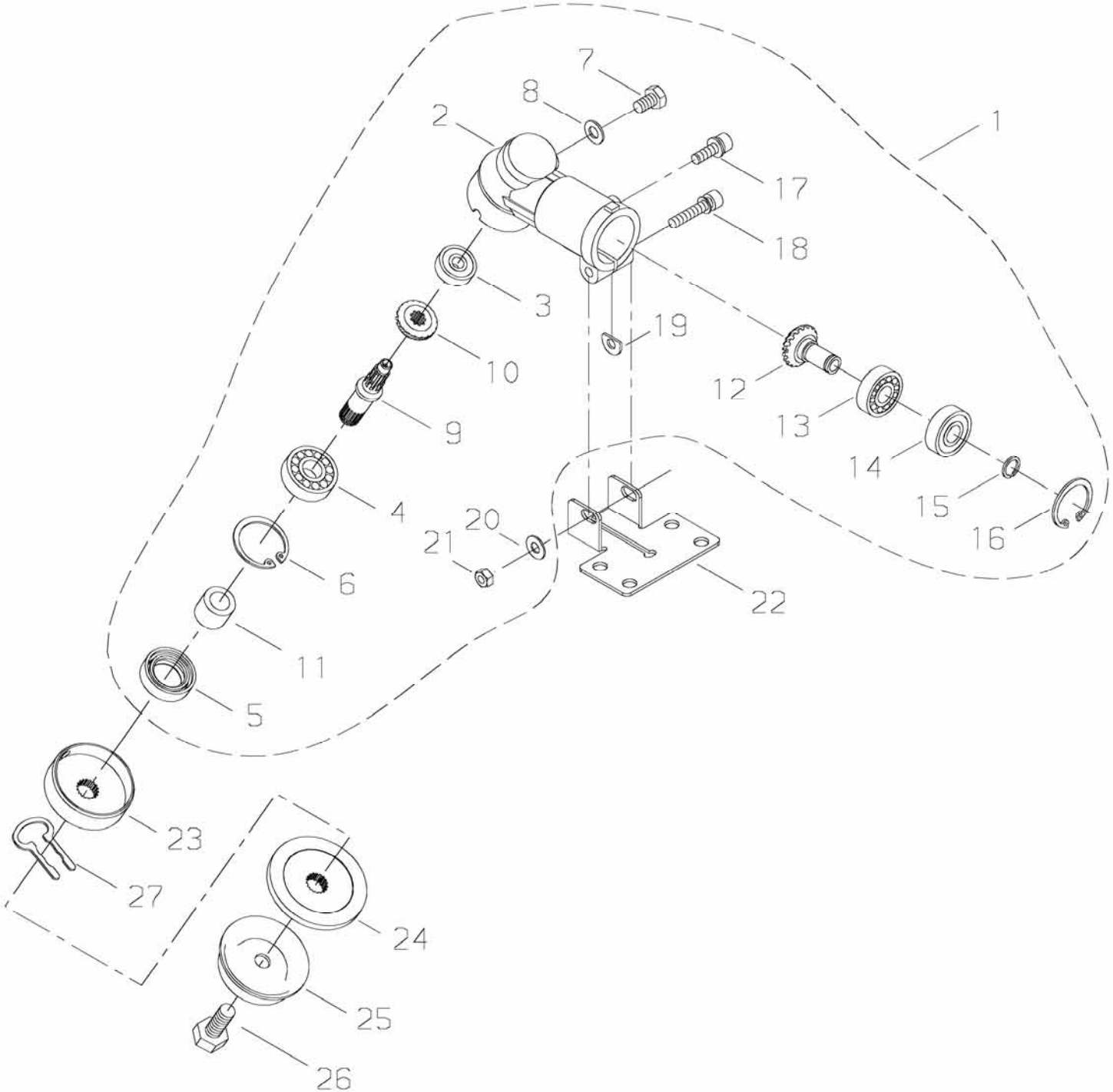
1
2
3
4
5
6
7
8
9
10
11
12
13
14
15
16
17
18
19
20
21
22
23
24
25
26
27

PRICE:($)

Ref. No.	Part No.	Part Name	Q`ty	Unit Price($)	Remarks
14-1	63901-63022	GEAR CASE SUBASSY	1		
2	22035-13113	*GEAR CASE	1		
3	02006-00626	*BALL BEARING	1		626DDU
4	02000-06000	*BALL BEARING	1		6000
5	22035-13140	*OIL SEAL	1		
6	02432-26120	*SNAP RING	1		26mm C
7	01014-06100	*BOLT	1		M6x10
8	22000-13410	*GASKET	1		
9	22410-13210	*GEAR SHAFT	1		
10	22035-13220	*BEVEL GEAR	1		
11	22035-13230	*COLLAR	1		
12	22035-13391	*BEVEL PINION SET	1		
13	02000-00608	*BALL BEARING	1		608
14	02002-00608	*BALL BEARING	1		608ZZ
15	22035-13340	*SNAP RING	1		
16	02432-22100	*SNAP RING	1		22mm C
17	11022-05160	*BOLT-SPW	1		M5x16
18	11022-05350	*BOLT-SPW	1		M5x35
19	22000-13420	*SHIM	1		
20	01613-05080	*WASHER	1		5mm
21	01500-05041	*NUT	1		M5
22	72480-16130	LOWER CLAMP	1		
23	22035-13242	HOLDER,A	1		
24	65011-63171	HOLDER	1		
25	37013-63311	BOLT GUARD	1		
26	22035-13271	BOLT	1		
27	22410-13530	SLIDE CLIP	1		

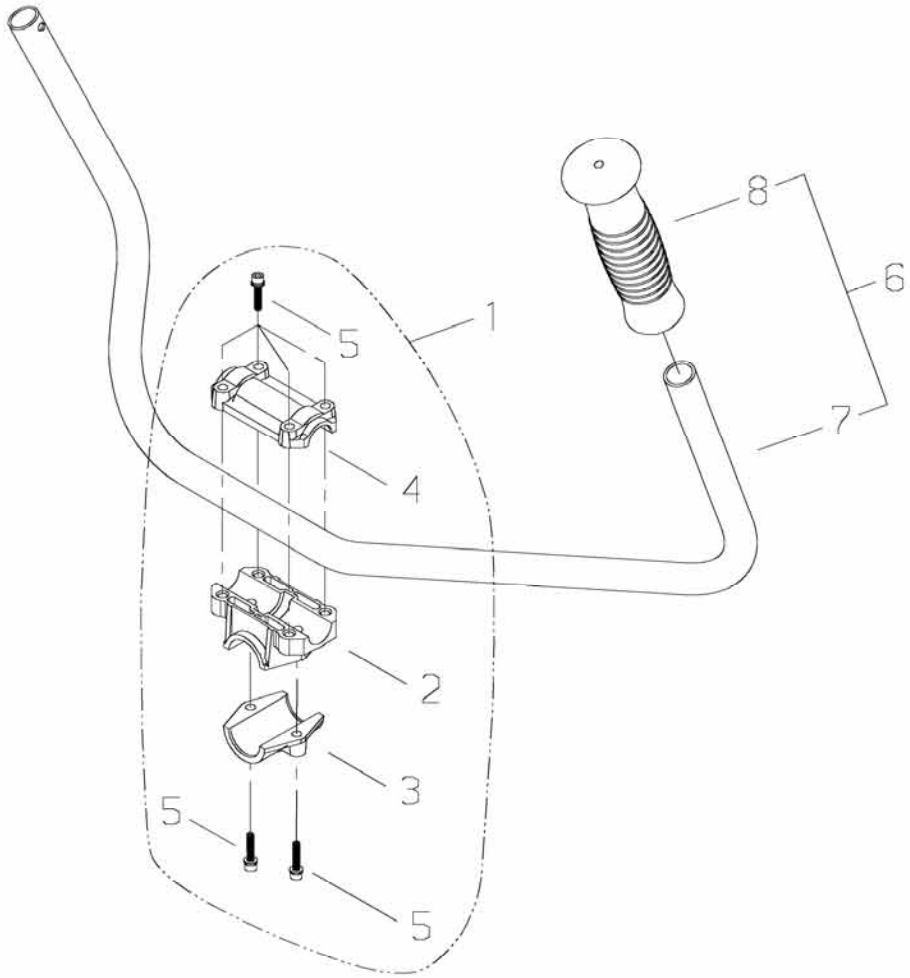
8
6
1
5
7
4
2
3
5
5

PRICE:($)

Ref. No.	Part No.	Part Name	Q`ty	Unit Price($)	Remarks
15-1	34004-64020	BRACKET ASSY	1		
2	34004-64110	*BRACKET	1		
3	34004-64120	*LOWER CAP	1		
4	34004-64130	*UPPER CAP	1		
5	11022-05250	*BOLT-SPW	6		M5*25
6	72529-14200	HANDLE SUBASSY	1		
7	72529-14210	*HANDLE	1		
8	22421-14230	*GRIP	1		

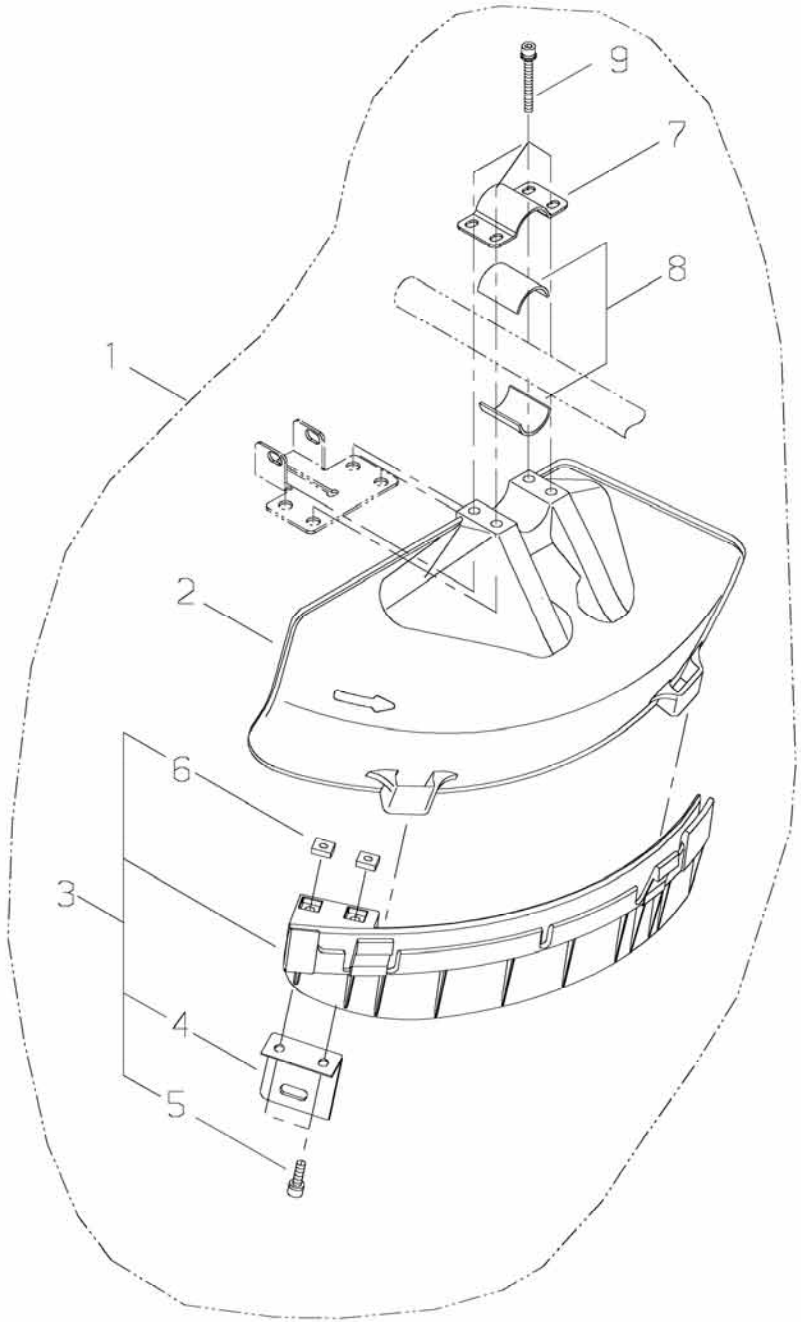
9
7
8
1
2
6
3
4
5

PRICE:($)

Ref. No.	Part No.	Part Name	Q`ty	Unit Price($)	Remarks
16-1	62903-66322	GUARD SET	1		
2	62903-66111	*GUARD	1		
3	62903-66332	*SUBGUARD ASSY	1		
4	72480-16121	**CUTTER	1		
5	11020-05160	**BOLT-SW	2		M5x16
6	22420-16120	**NUT	2		
7	72480-16210	*UPPER CLAMP	1		
8	72480-16220	*SPACER	2		
9	11022-05450	*BOLT-SPW	4		M5x45

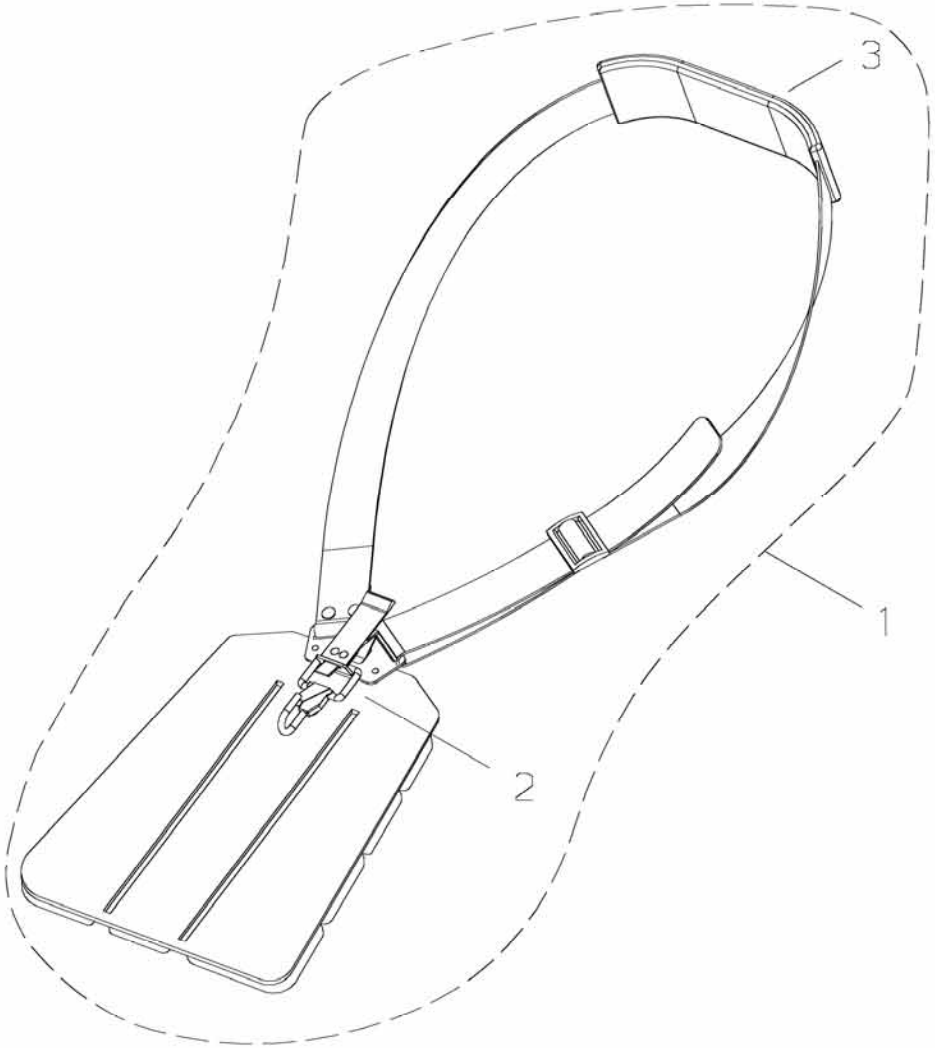
3
1
2

PRICE:($)

Ref. No.	Part No.	Part Name	Q`ty	Unit Price($)	Remarks
17-1	72474-17201	STRAP ASSY	1		
2	22421-17130	*HOOK	1		
3	22007-17220	*PROTECTOR	1		

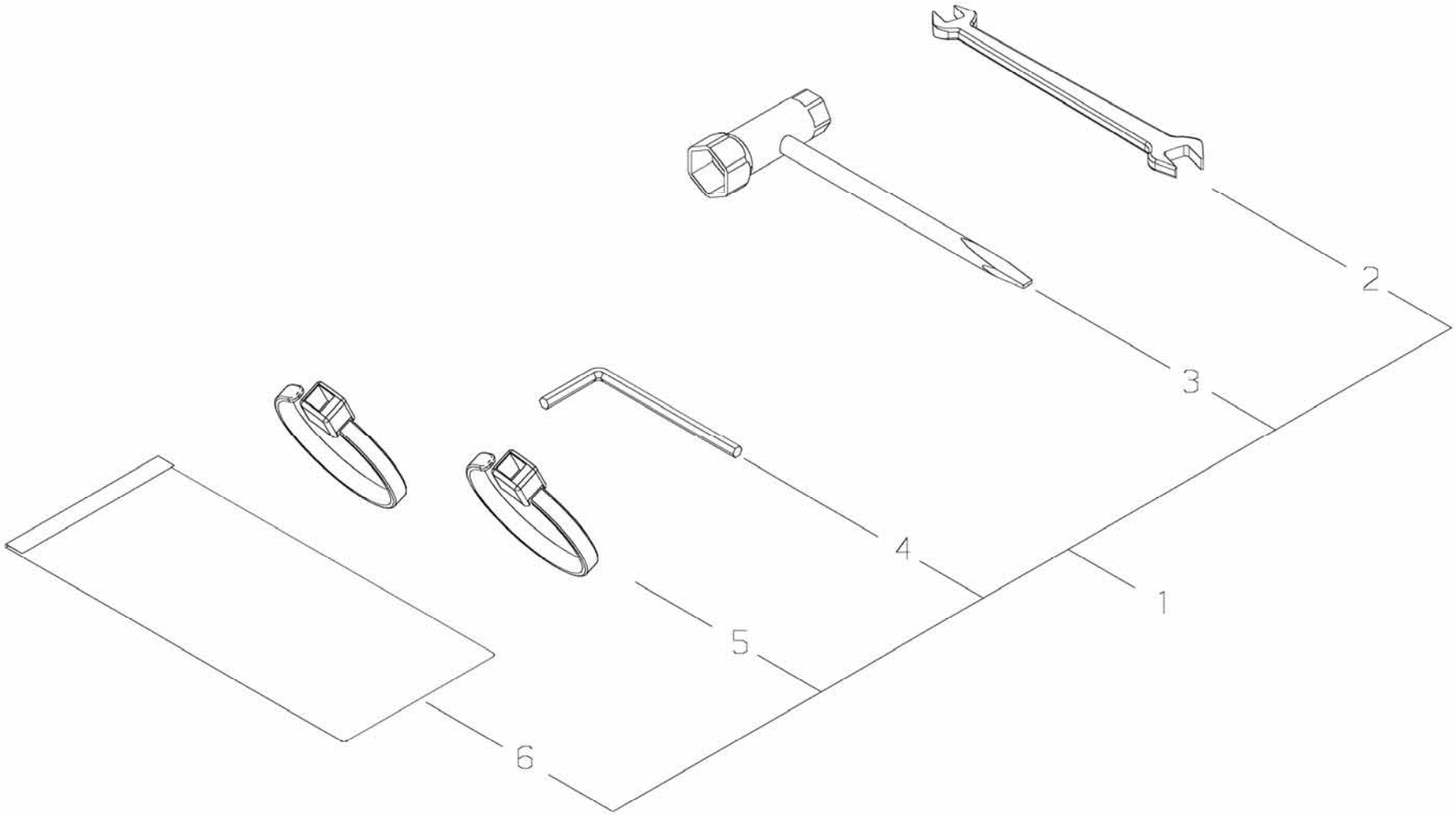
2
3
4
1
5
6

PRICE:($)

Ref. No.	Part No.	Part Name	Q`ty	Unit Price($)	Remarks
18-1	62906-92310	TOOL SET	1		
2	22000-91120	*SPANNER	1		8×10
3	22580-91180	*PLUG WRENCH	1		16×13
4	09026-04001	*HEXA-WRENCH	1		4mm
5	72431-12190	*BAND	2		
6	19639-01400	*POLY-BAG	1		

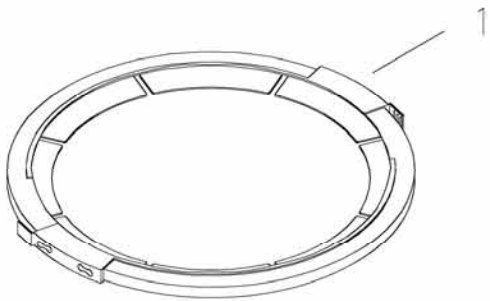
1

PRICE:($)

Ref. No.	Part No.	Part Name	Q`ty	Unit Price($)	Remarks
19-1	22550-92310	BLADE COVER	1		

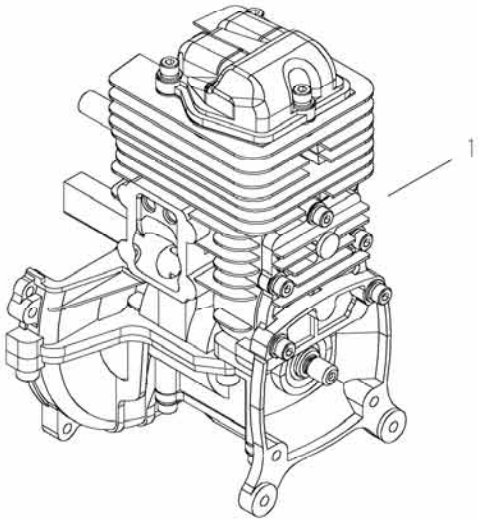
1

PRICE:($)

Ref. No.	Part No.	Part Name	Q`ty	Unit Price($)	Remarks
20-1	60908-98380	SHORT BLOCK	1		

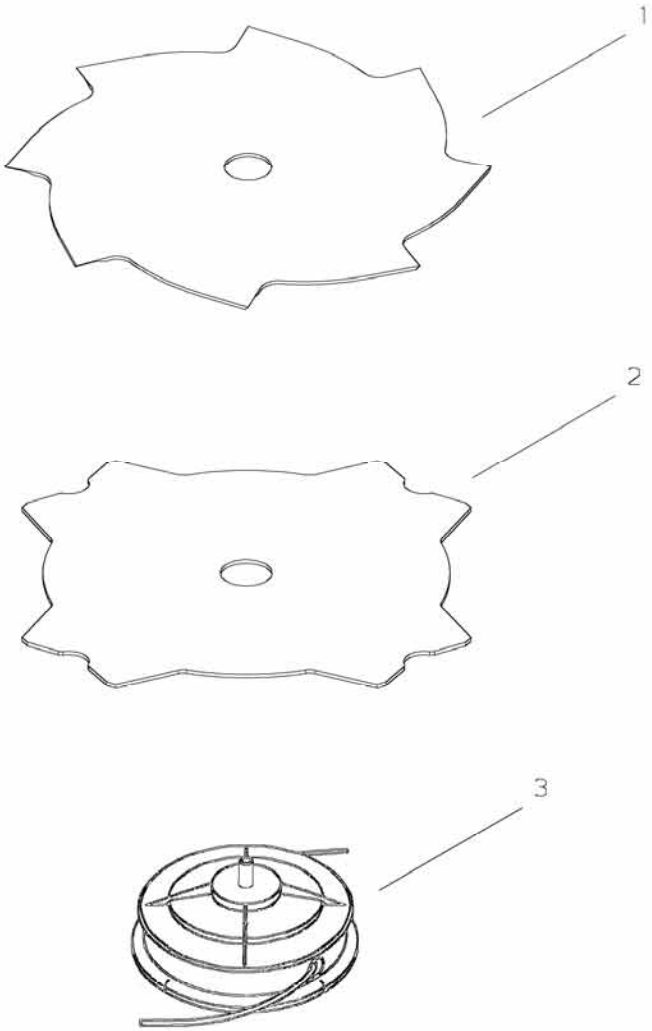
1
2
3

PRICE:($)

Ref. No.	Part No.	Part Name	Q`ty	Unit Price($)	Remarks
21-1	60903-98310	EDDY SAW	1		
2	60903-98320	CROSS SAW	1		
3	67000-65010	TRIMMER HEAD ASSY	1		