shindaiwa

PARTS PRICE LIST

C260

Shindaiwa Corporation

6-2-11,Ozuka-Nishi, Asaminami-ku, Hiroshima, 731-3167, Japan
Telephone (082) 849-2005 Fax (082) 849-2481

C260／EC1
MAR. 2, 2009
Printed in Japan

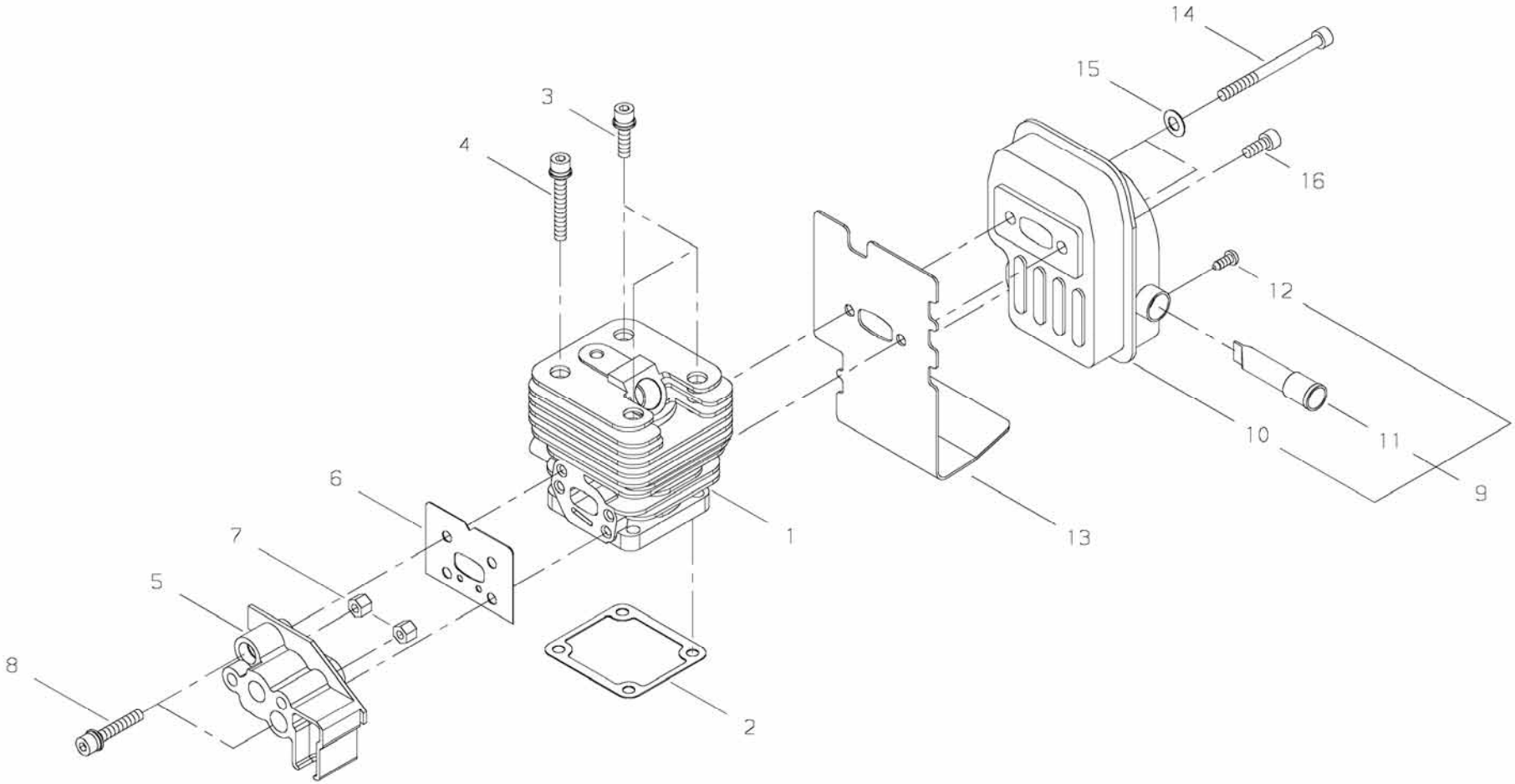
14
15
3
4
16
12
10
11
9
6
1
13
7
5
8
2

PRICE:($)

Ref. No.	Part No.	Part Name	Q`ty	Unit Price($)	Remarks
1-1	70144-12110	CYLINDER	1		
2	20018-12120	GASKET	1		
3	11020-05160	BOLT-SW	3		M5×16
4	11020-05350	BOLT-SW	1		M5×35
5	20110-12211	INSULATOR	1		
6	20110-12221	GASKET	1		
7	20024-12260	NUT	2		
8	11022-05300	BOLT-SPW	2		
9	70135-15100	MUFFLER ASSY	1		
10	70135-15110	*MUFFLER	1		
11	70103-15150	*SPARK ARRESTER	1		
12	01270-03062	*SCREW,TAPPING	1		
13	20018-15150	GASKET	1		
14	01020-05500	BOLT	2		M5×50
15	01610-05080	WASHER	2		
16	01020-05120	BOLT	1		M5×12

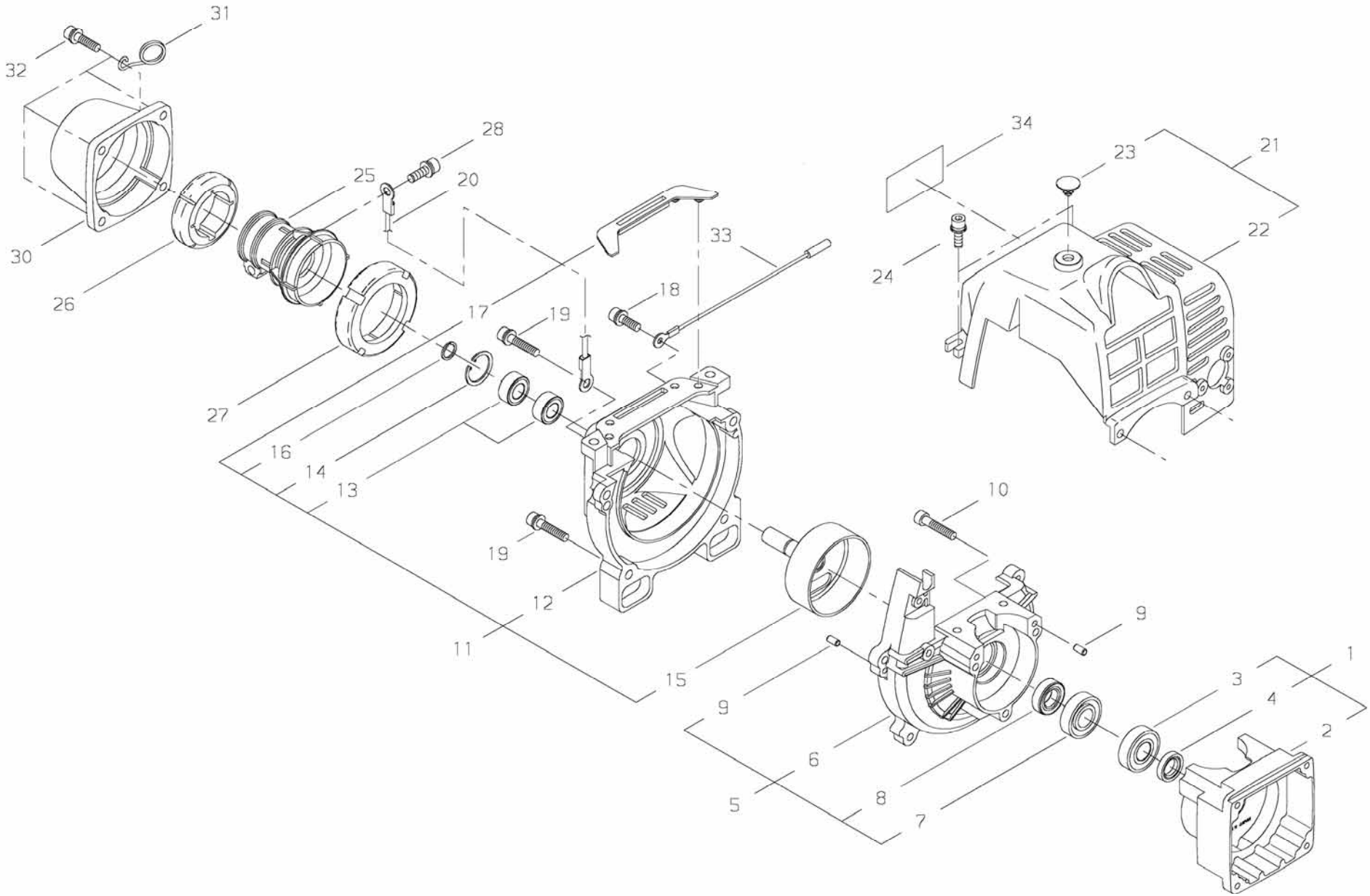
31
32
28
25
20
30
26
34
23
21
22
24
33
18
17
19
27
16
14
13
10
19
12
11
9
15
9
1
3
4
2
6
5
8
7

PRICE:($)

Ref. No.	Part No.	Part Name	Q`ty	Unit Price($)	Remarks
2-1	20018-21100	CRANKCASE,S COMP	1		
2	20018-21111	*CRANKCASE,S	1		
3	12900-60010	*BALL BEARING	1		
4	22150-21250	*OIL SEAL	1		
5	20110-21201	CRANKCASE,M COMP	1		
6	20018-21122	*CRANKCASE,M	1		
7	12900-60010	*BALL BEARING	1		
8	20000-21211	*OIL SEAL	1		
9	12492-40080	*ROLLER	4		
10	01020-05250	BOLT	3		M5*25
11	62011-31011	FAN COVER COMP	1		
12	20134-31111	*FAN COVER	1		
13	02006-06000	*BALL BEARING	2		6000DDU
14	02432-26120	*SNAP RING	1		26mm C
15	20018-31330	*CLUTCH DRUM	1		
16	22000-13320	*SNAP RING	1		
17	20110-31130	*CUSHION	1		
18	11022-05160	BOLT-SPW	2		M5*16
19	11022-05300	BOLT-SPW	2		
20	70192-31510	EARTH CORD	1		
21	62011-32010	CYLINDER COVER COMP	1		
22	20134-32110	*CYLINDER COVER	1		
23	20134-32130	*PLUG	1		
24	11022-05160	BOLT-SPW	2		M5*16
25	20018-31411	JOINT	1		
26	20018-31420	FRONT CUSHION	1		
27	20018-31430	REAR CUSHION	1		
28	11023-05250	BOLT-DW	1		M5*25
29					
30	70135-31470	CAP	1		
31	20024-83152	CABLE HOLDER	1		
32	11022-05200	BOLT-SPW	4		M5*20(SW,PW)
33	70201-83130	CORD	1		
34	70202-32120	LABEL,TRADE	1		

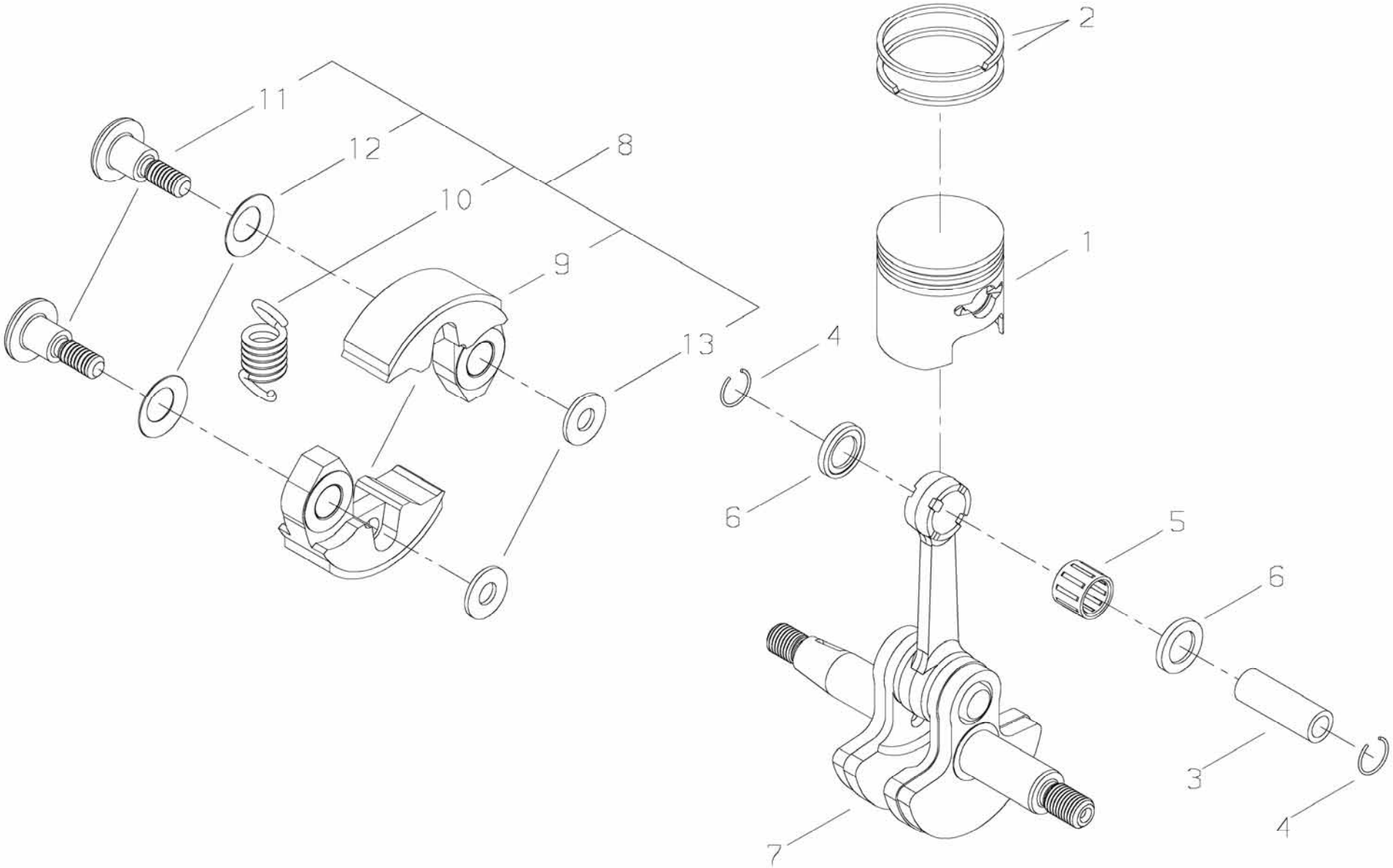
2
11
12
8
10
1
9
13
4
6
5
6
3
4
7

PRICE:($)

Ref. No.	Part No.	Part Name	Q`ty	Unit Price($)	Remarks
3-1	20000-41111	PISTON	1		
2	20000-41210	PISTON RING	2		
3	20000-41310	PISTON PIN	1		
4	20000-41320	SNAP RING	2		
5	37019-41230	NEEDLE BEARING	1		
6	37019-41240	THRUST WASHER	2		
7	20018-42000	CRANKSHAFT	1		
8	70140-51102	CLUTCH SHOE ASSY	1		
9	70140-51113	*CLUTCH SHOE	2		
10	37013-51310	*COIL SPRING	1		
11	20087-51210	*BOLT	2		
12	20087-51231	*SPRING PLATE	2		
13	22100-71430	*WASHER	2		

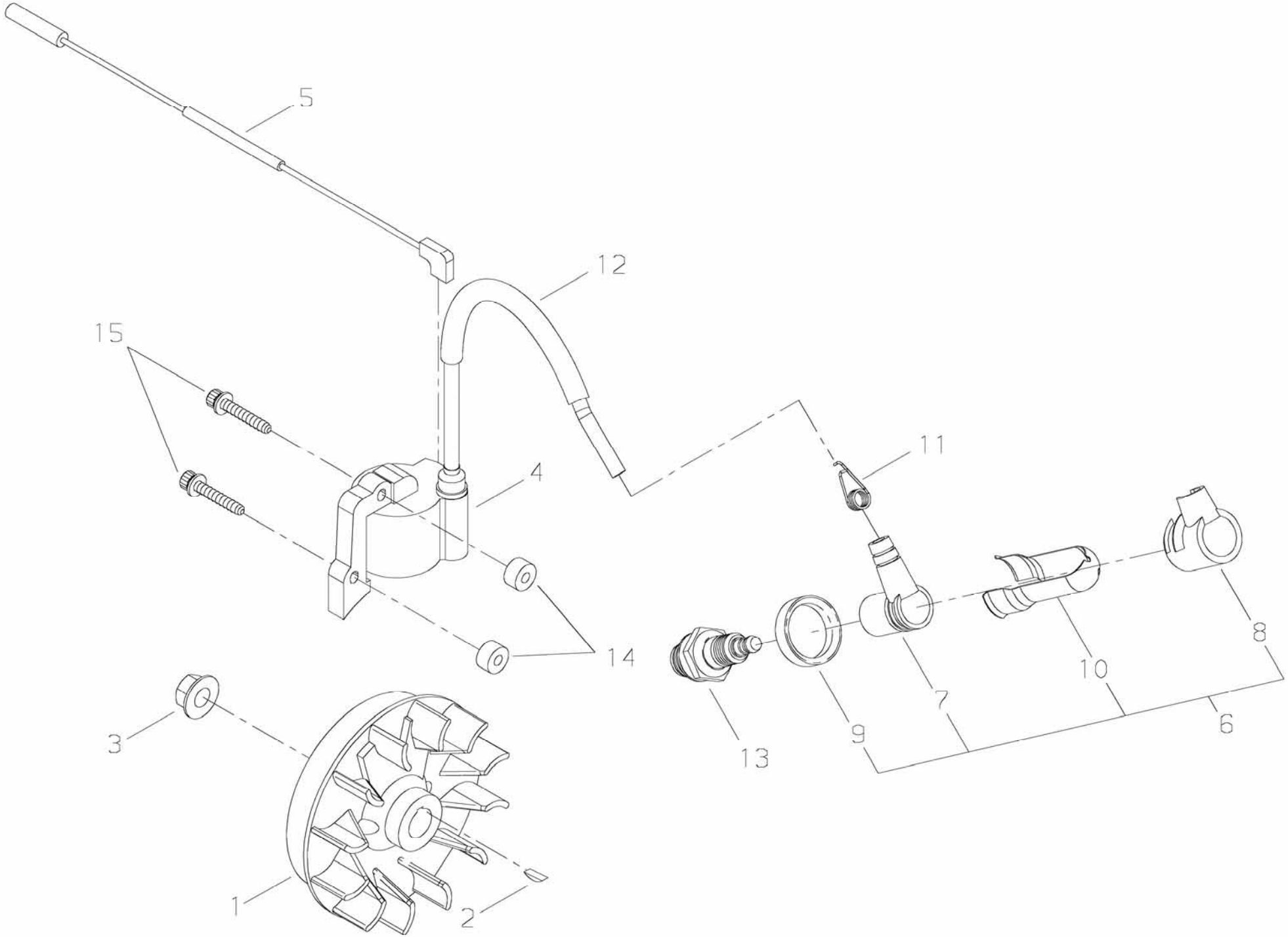
5
12
15
11
4
14
8
10
7
6
9
13
3
1
2

PRICE:($)

Ref. No.	Part No.	Part Name	Q`ty	Unit Price($)	Remarks
4-1	20018-71200	ROTOR	1		
2	02403-03100	KEY	1		3*10
3	20035-71220	NUT	1		
4	20029-71600	COIL ASSY	1		
5	70201-71640	CORD	1		
6	70223-72200	PLUG CAP COMP	1		
7	20010-72221	*PLUG CAP	1		
8	20000-72241	*CAP COVER	1		
9	20000-72250	*COVER,BAND	1		
10	70180-72260	*SHIELD	1		
11	20000-72230	SPRING,PLUG	1		
12	20089-83120	TUBE	1		
13	13000-13506	SPARK PLUG	1		BPMR6A
14	70030-71620	INSULATOR	2		
15	11024-04261	BOLT-SLPW	2		M4*26

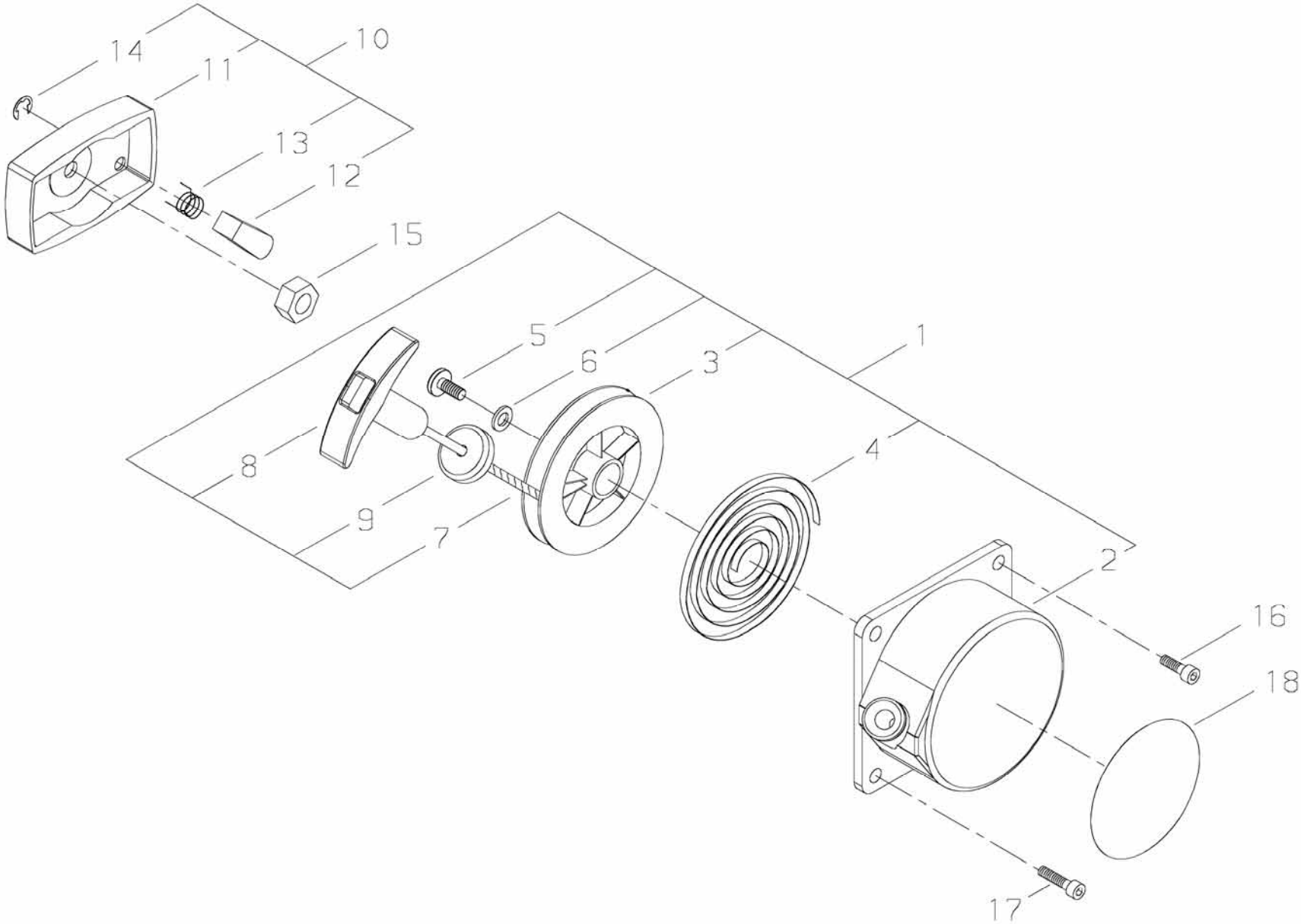
14
11
10
13
12
15
5
6
3
1
8
4
9
7
2
16
18
17

PRICE:($)

Ref. No.	Part No.	Part Name	Q`ty	Unit Price($)	Remarks
5-1	70102-75901	RECOIL STARTER SUBASSY	1		
2	70102-75110	*STARTER CASE	1		
3	20024-75120	*REEL	1		
4	20024-75130	*RECOIL SPRING	1		
5	20035-75170	*SCREW	1		
6	20024-75140	*WASHER	1		
7	20024-75160	*ROPE	1		
8	20024-75190	*STARTER KNOB	1		
9	20024-75180	*DAMPER	1		
10	20024-75200	STARTER PULLEY SUBASSY	1		
11	20024-75210	*STARTER PULLEY	1		
12	20024-75220	*RATCHET	1		
13	20024-75230	*RETURN SPRING	1		
14	20024-75240	*E RING	1		
15	20035-43230	NUT	1		
16	11022-05200	BOLT-SPW	2		M5×20
17	11022-05250	BOLT-SPW	2		M5×25
18	19420-00026	LABEL,TRADE	1		

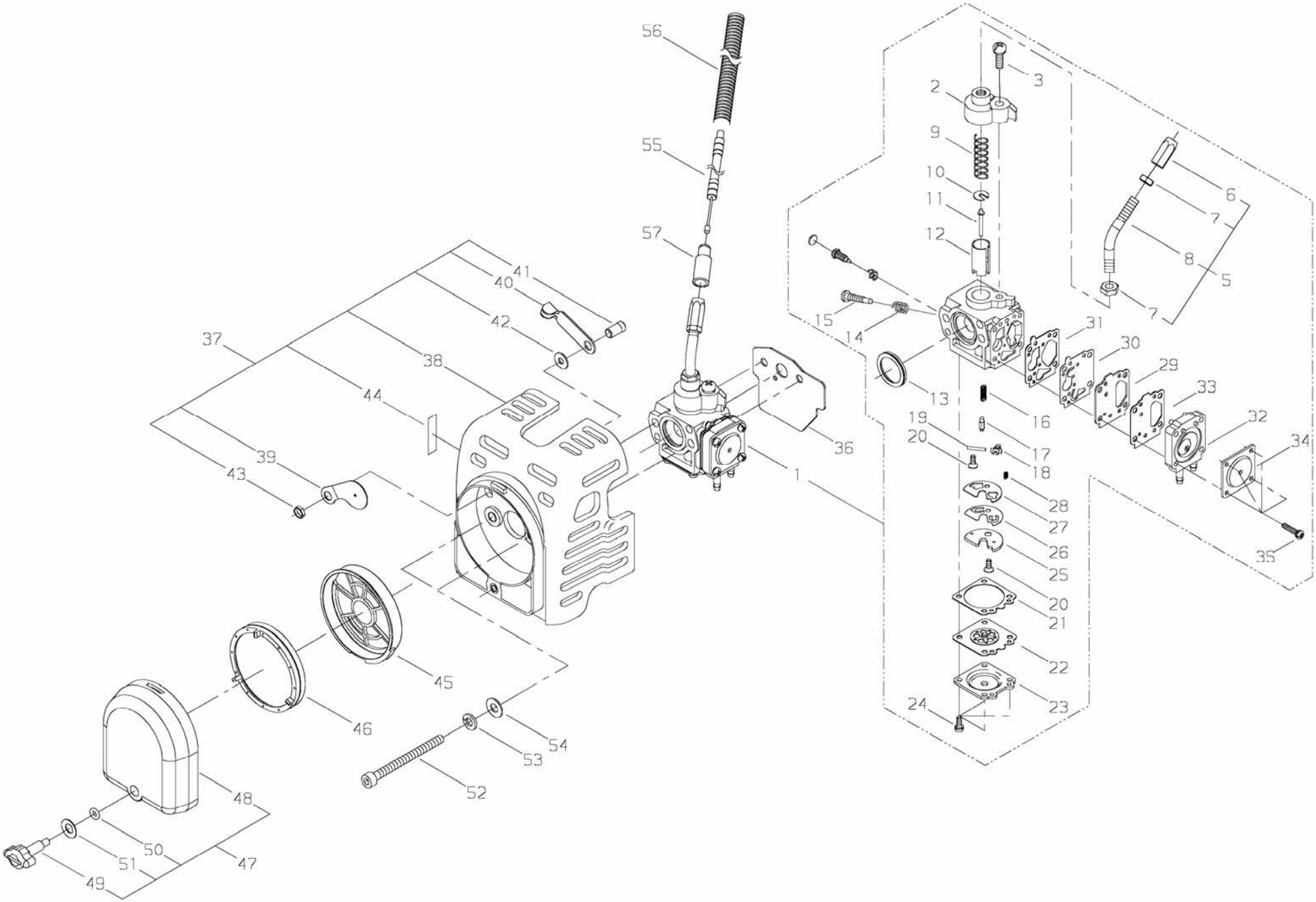
56
55
57
41
40
42
37
38
44
39
43
36
1
2
3
9
10
11
12
6
7
8
5
7
15
14
13
31
30
29
33
32
34
16
17
18
19
20
28
27
26
25
20
21
22
23
24
35
45
46
54
53
52
48
50
51
47
49

PRICE:($)

Ref. No.	Part No.	Part Name	Q`ty	Unit Price($)	Remarks
6-1	70144-81021	CARBURETOR ASSY	1		
2	70144-81340	*BODY TOP COMP	1		
3	20019-81120	*SCREW	1		M5×15
4					
5	70144-81320	*ELBOW ASSY	1		
6	20055-81810	**CABLE ADJUSTER	1		
7	20000-81260	**NUT	2		
8	70144-81330	**ELBOW	1		
9	20003-81140	*SPRING	1		
10	20000-81150	*SPRING RECEIVE	1		
11	70144-81170	*JET NEEDLE	1		
12	20019-81182	*THROTTLE VALVE	1		
13	20019-81280	*RING GASKET	1		
14	72920-81820	*SPRING	1		
15	20019-81310	*SLOW STOP SCREW	1		
16	20040-81430	*SPRING	1		
17	20019-81440	*NEEDLE VALVE	1		
18	20019-81450	*CONTROL LEVER	1		
19	20011-81460	*PIN	1		
20	20011-81470	*SCREW	2		M3×8
21	20019-81510	*GASKET	1		
22	20019-81520	*DIAPHRAGM ASSY	1		
23	20019-81530	*COVER,DIAPHRAGM	1		
24	20000-81540	*SCREW	4		M3×8
25	20019-81560	*PLATE	1		
26	20019-81570	*CHECK VALVE	1		
27	20019-81580	*GASKET	1		
28	20011-81680	*SPRING	1		
29	20019-81610	*PUMP PLATE	1		
30	20019-81620	*DIAPHRAGM,PUMP	1		
31	20019-81630	*GASKET	1		
32	20019-81641	*PUMP COVER	1		
33	20019-81660	*GASKET	1		
34	20019-81670	*COVER,DIAPHRAGM	1		
35	20019-81680	*SCREW	4		M3×14
36	20110-83431	GASKET	1		
37	20134-82100	CLEANER BODY COMP	1		
38	20134-81711	*CLEANER BODY	1		

PRICE:($)

Ref. No.	Part No.	Part Name	Q`ty	Unit Price($)	Remarks
6-39	20115-82121	*CHOKE PLATE	1		
40	20115-82130	*CHOKE LEVER	1		
41	20110-82140	*CHOKE SHAFT	1		
42	20024-81790	*CONE WASHER	1		
43	11524-06211	*U NUT	1		
44	19404-00008	*LABEL,CHOKE	1		
45	62028-82310	NET	1		
46	60028-98010	FILTER	1		
47	20115-81770	CLEANER COVER COMP	1		
48	20024-81770	*CLEANER COVER	1		
49	20115-81780	*KNOB,CLEANER COVER	1		
50	22100-82430	*O RING	1		
51	20024-81790	*CONE WASHER	1		
52	01020-05600	BOLT	2		M5×60
53	01600-05131	SPRING WASHER	2		
54	01610-05080	WASHER	2		
55	20024-83210	THROTTLE CABLE	1		
56	70201-83140	TUBE	1		
57	20005-83160	CABLE CAP	1		

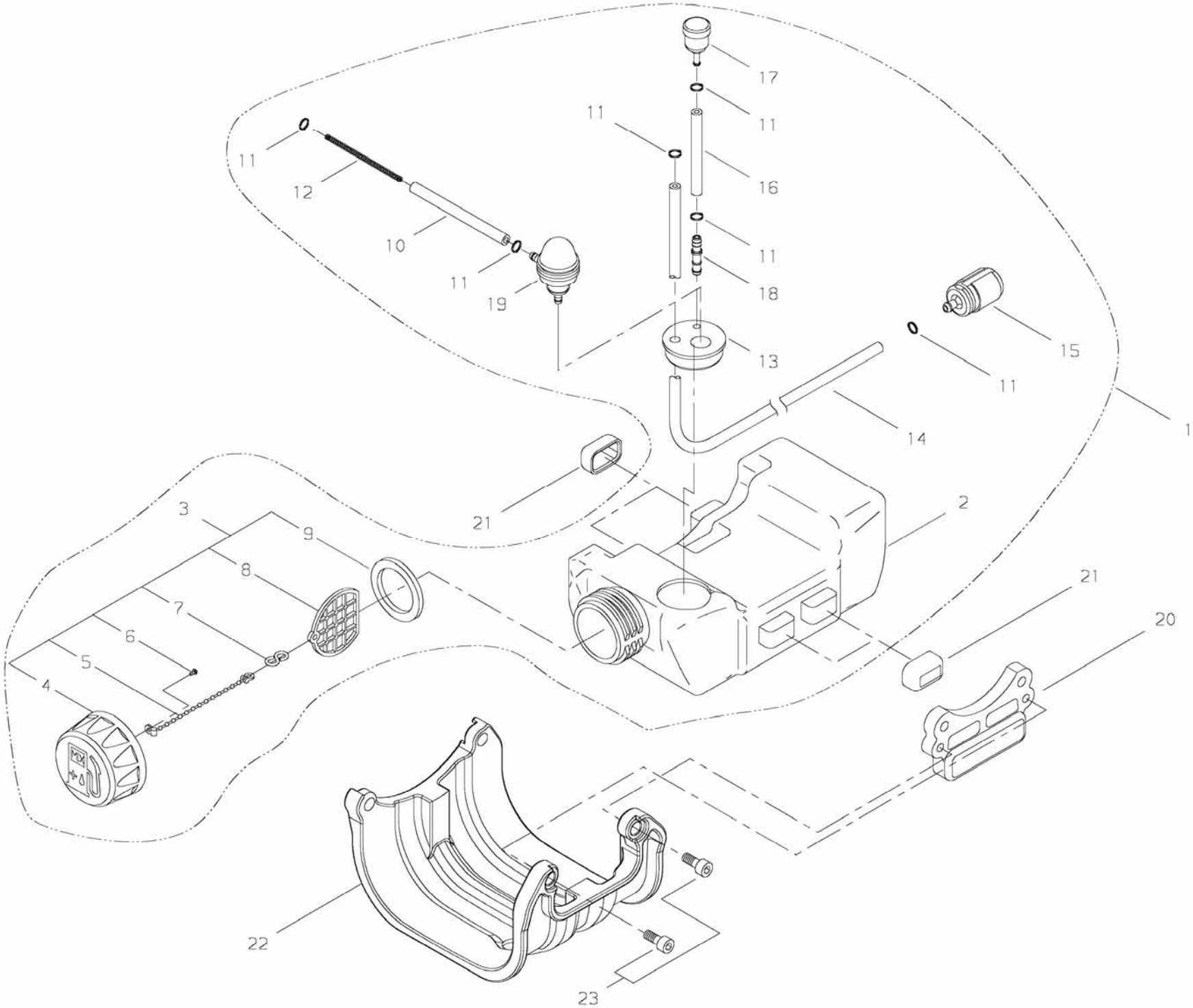
17
11
11
16
11
12
10
11
19
11
18
13
15
11
14
1
21
2
3
9
8
7
6
5
4
21
20
22
23

PRICE:($)

Ref. No.	Part No.	Part Name	Q`ty	Unit Price($)	Remarks
7-1	70223-85000	FUEL TANK ASSY	1		
2	20018-85113	*FUEL TANK	1		
3	70168-85201	*FUEL CAP ASSY	1		
4	70168-85210	**FUEL CAP	1		
5	22128-57250	**CHAIN CAP	1		
6	01270-25064	**SCREW,TAPPING	1		
7	22155-21330	**HOOK	1		
8	22150-21350	**CLIP	1		
9	20000-85221	**GASKET	1		
10	20018-83311	*PIPE	1		
11	20020-85540	*CLIP	6		
12	20019-83320	*SPRING	1		
13	20019-85351	*GROMMET	1		
14	20110-85320	*FUEL PIPE	1		
15	22115-85401	*FUEL FILTER SUBASSY	1		
16	20110-83311	*PIPE	1		
17	20035-85522	*VALVE	1		
18	72933-85620	*JOINT	1		
19	20019-85600	*PUMP COMP	1		
20	20018-86112	TANK HOLDER	1		
21	20018-86120	TANK CUSHION	4		
22	62902-85320	TANK GUARD	1		
23	11022-05160	BOLT-SPW	2		M5x16

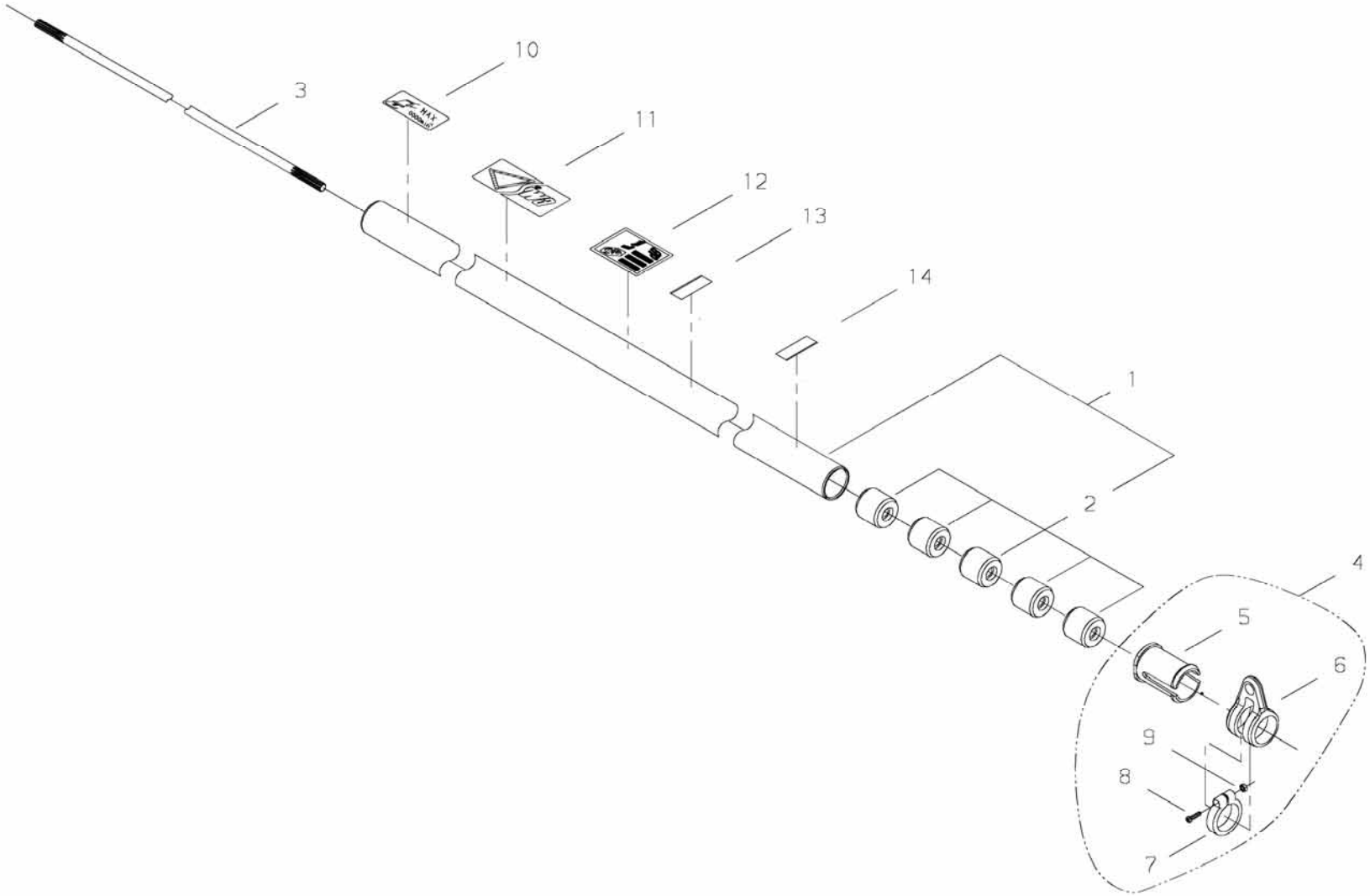
10
3
11
12
13
14
1
2
4
5
6
9
8
7

PRICE:($)

Ref. No.	Part No.	Part Name	Q`ty	Unit Price($)	Remarks
8-1	37094-62010	OUTER PIPE COMP	1		
2	22420-12120	*BUSH	5		
3	22000-12413	MAIN SHAFT	1		
4	33008-62340	HANGER ASSY	1		
5	33008-62321	*COLLAR	1		
6	33008-62151	*HANGER	1		
7	33008-62311	*CLAMP	1		
8	11203-04160	*SCREW,PM	1		M4*16
9	01500-04031	*NUT	1		M4 MFZN3-C
10	19402-00223	LABEL,CAUTION	1		MAX 8500MIN-1
11	19422-00010	LABEL,CAUTION	1		
12	19404-00037	LABEL,DECIBEL	1		112dB(A)
13	72017-12150	HANDLE LABEL	1		
14	72005-12140	CAUTION PLATE	1		

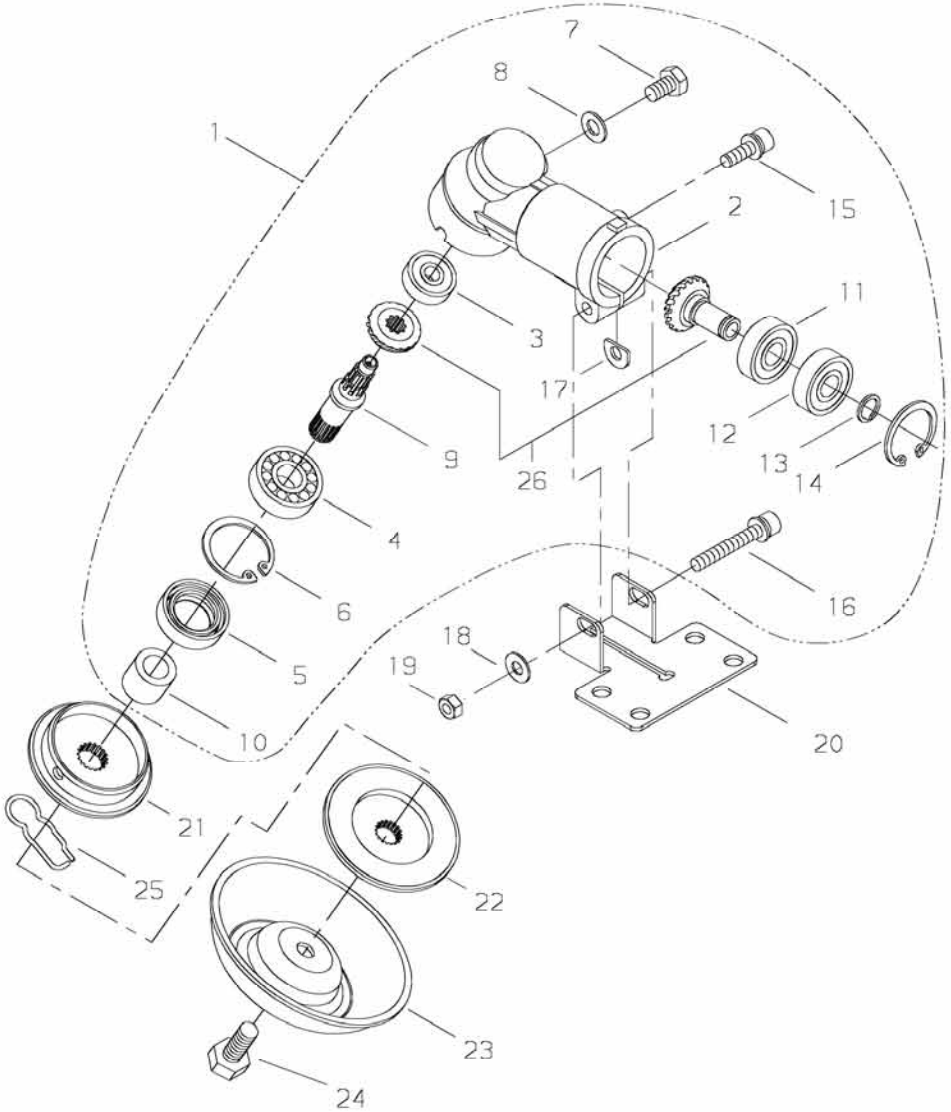
1
2
3
4
5
6
7
8
9
10
11
12
13
14
15
16
17
18
19
20
21
22
23
24
25
26

PRICE:($)

Ref. No.	Part No.	Part Name	Q`ty	Unit Price($)	Remarks
9-1	63030-63023	GEAR CASE SUBASSY	1		
2	22420-13110	GEAR CASE	1		
3	02036-00608	BALL BEARING	1		608 DDUMC4(XR230)
4	37074-63310	BALL BEARING	1		
5	22420-13140	OIL SEAL	1		
6	02432-28120	SNAP RING	1		
7	01014-06100	BOLT	1		
8	01610-06080	WASHER	1		6mm T:0.8 MFZN3-C
9	22495-13210	GEAR SHAFT	1		
10	22000-13230	COLLAR	1		
11	02000-00609	BALL BEARING	1		
12	02002-00609	BALL BEARING	1		609ZZ
13	22420-13350	SNAP RING	1		
14	02432-24120	SNAP RING	1		C
15	11022-05160	BOLT-SPW	1		M5*16
16	11022-05350	BOLT-SPW	1		M5*35 SPW
17	22000-13420	SHIM	1		
18	01613-05080	WASHER	1		MFZN3-C
19	01500-05041	NUT	1		M5 MFZN3-C
20	72480-16130	LOWER CLAMP	1		
21	22420-13510	HOLDER,A	1		
22	37019-63170	HOLDER	1		
23	72444-13290	STABILIZER,S	1		
24	22000-13512	BOLT	1		
25	22000-13530	SLIDE PIN	1		
26	60088-98310	GEAR SET	1		

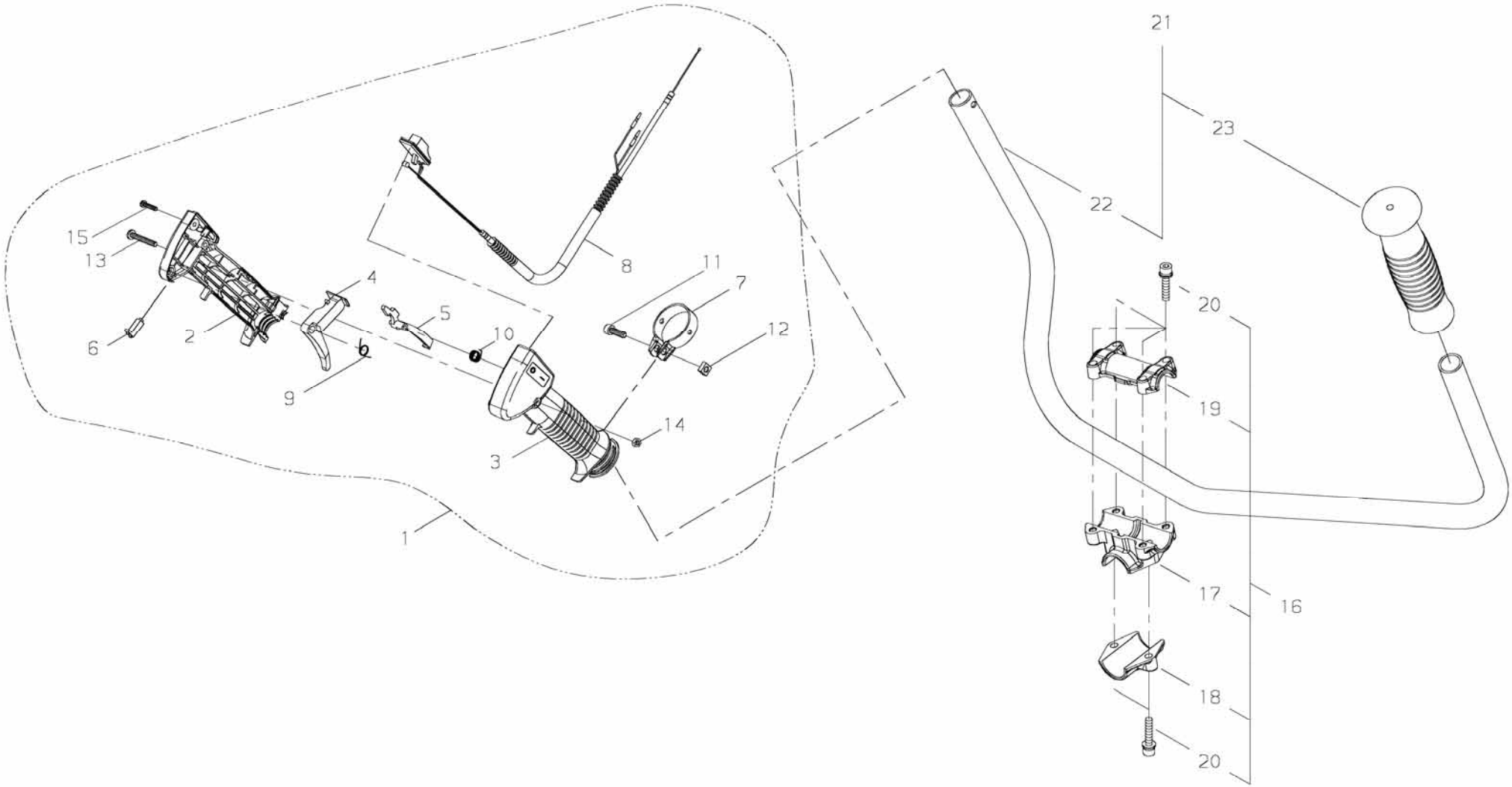
15
13
6
2
4
9
5
10
8
11
7
12
14
3
1
21
23
22
20
19
17
16
18
20

PRICE:($)

Ref. No.	Part No.	Part Name	Q`ty	Unit Price($)	Remarks
10-1	62097-64250	THROTTLE LEVER ASSY	1		
2	72431-14510	*BODY,RIGHT	1		
3	72431-14520	*BODY,LEFT	1		
4	72451-14530	*LEVER	1		
5	72451-14540	*LOCK LEVER	1		
6	72451-14550	*BUTTON	1		
7	72451-14560	*CLAMP	1		
8	62097-64310	*THROTTLE CABLE COMP	1		
9	72451-14580	*RETURN SPRING	1		
10	72451-14590	*SPRING	1		
11	01020-06200	*BOLT	1		M6*20
12	72451-14610	*NUT	1		
13	11203-05351	*SCREW,PM	1		
14	72451-14630	*NUT	1		
15	72451-14620	*SCREW,TAPPING	1		
16	34004-64020	BRACKET ASSY	1		
17	34004-64110	*BRACKET	1		
18	34004-64120	*LOWER CAP	1		
19	34004-64130	*UPPER CAP	1		
20	11022-05250	*BOLT-SPW	6		M5*25 (SW,PW)
21	72529-14200	HANDLE SUBASSY	1		
22	72529-14210	*HANDLE	1		
23	22421-14230	*GRIP	1		

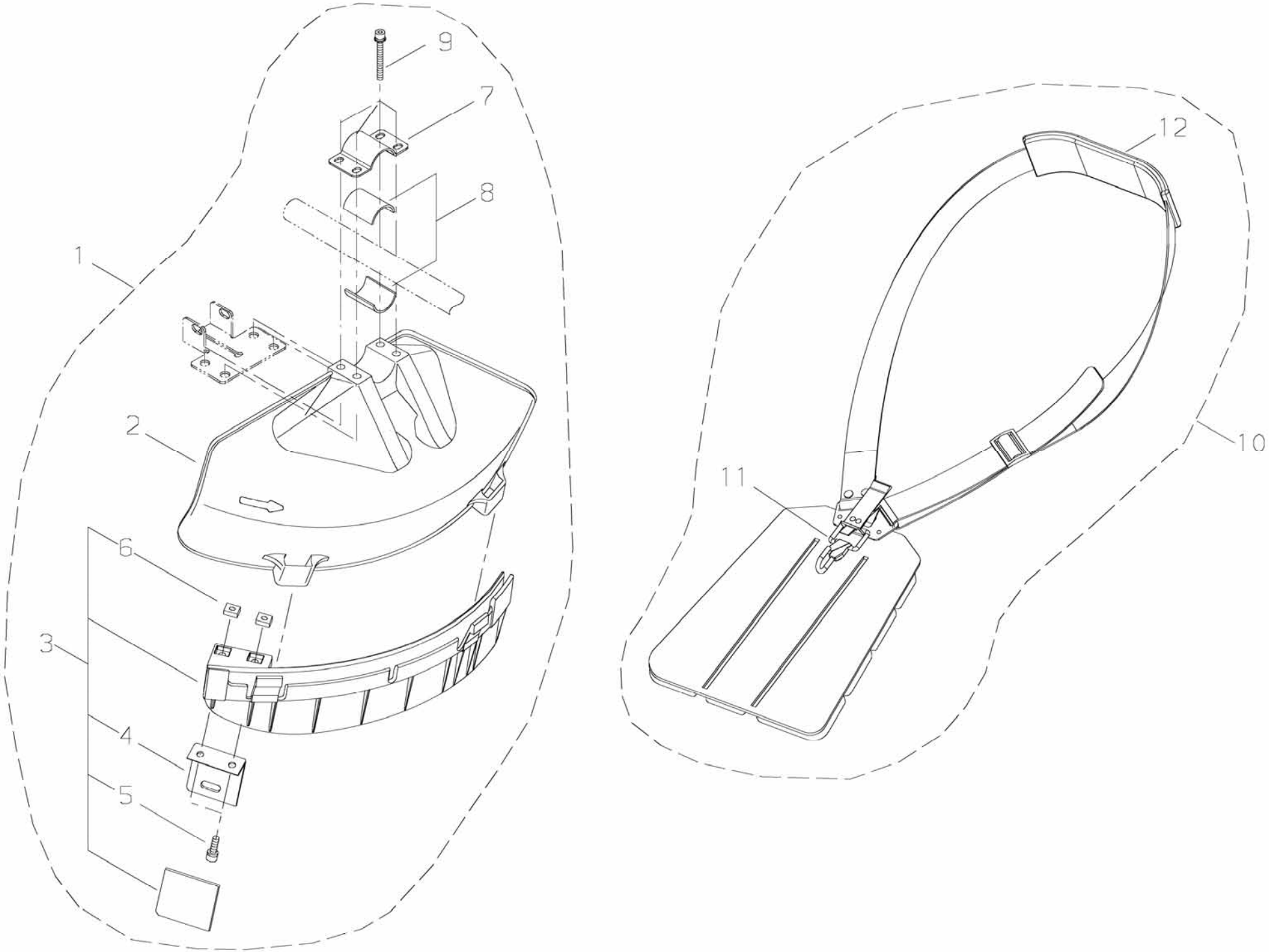
9
7
8
1
2
6
3
4
5
12
10
11

PRICE:($)

Ref. No.	Part No.	Part Name	Q`ty	Unit Price($)	Remarks
11-1	62903-66322	GUARD SET	1		
2	62903-66111	*GUARD	1		
3	62903-66332	*SUBGUARD ASSY	1		
4	72480-16121	**CUTTER	1		
5	11020-05160	**BOLT-SW	2		
6	22420-16120	**NUT	2		
7	72480-16210	*UPPER CLAMP	1		
8	72480-16220	*SPACER	2		
9	11022-05450	*BOLT-SPW	4		M5x45 SPW
10	72474-17201	STRAP ASSY	1		
11	22421-17130	*HOOK	1		
12	22007-17220	*PROTECTOR	1		

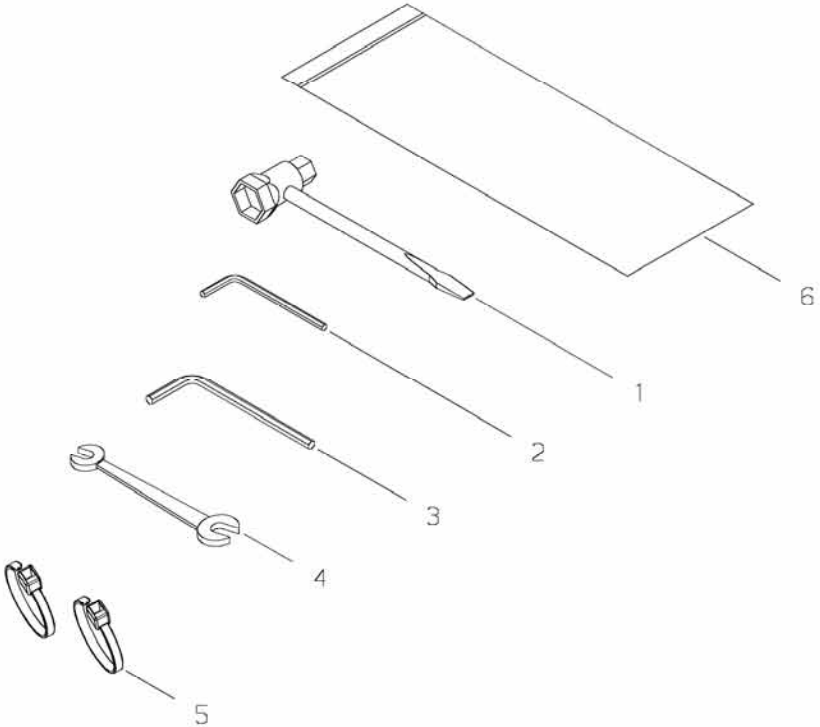
6
1
2
3
4
5

PRICE:($)

Ref. No.	Part No.	Part Name	Q`ty	Unit Price($)	Remarks
12-1	22000-91181	PLUG WRENCH	1		19×13
2	09026-04001	HEXA-WRENCH	1		4mm M5
3	09026-05001	HEXA-WRENCH	1		5mm M6
4	22000-91120	SPANNER	1		8×10
5	72431-12190	BAND	2		
6	19639-01400	POLY-BAG	1		G-8 140*200*t0.08

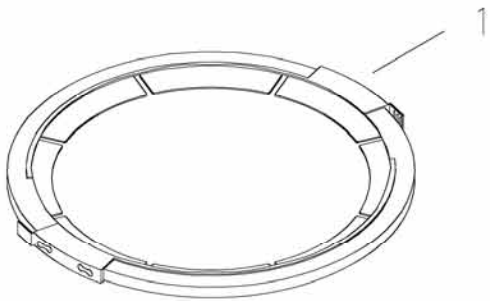
1

PRICE:($)

Ref. No.	Part No.	Part Name	Q`ty	Unit Price($)	Remarks
13-1	22550-92310	BLADE COVER	1		

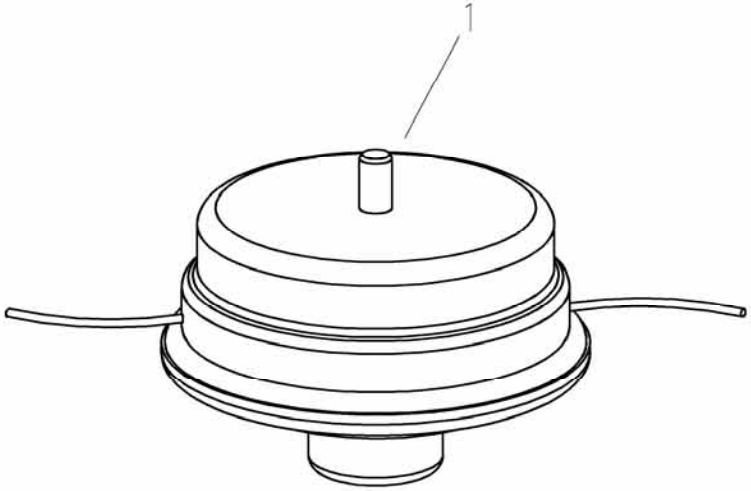
1

PRICE:($)

Ref. No.	Part No.	Part Name	Q`ty	Unit Price($)	Remarks
14-1	78820-04000	TRIMMER HEAD	1		