shindaiwa

PARTS PRICE LIST

F220

Shindaiwa Corporation

6-2-11,Ozuka-Nishi, Asaminami-ku, Hiroshima, 731-3167, Japan
Telephone (082) 849-2005 Fax (082) 849-2481

F220／EC1
MAR. 2, 2009
Printed in Japan

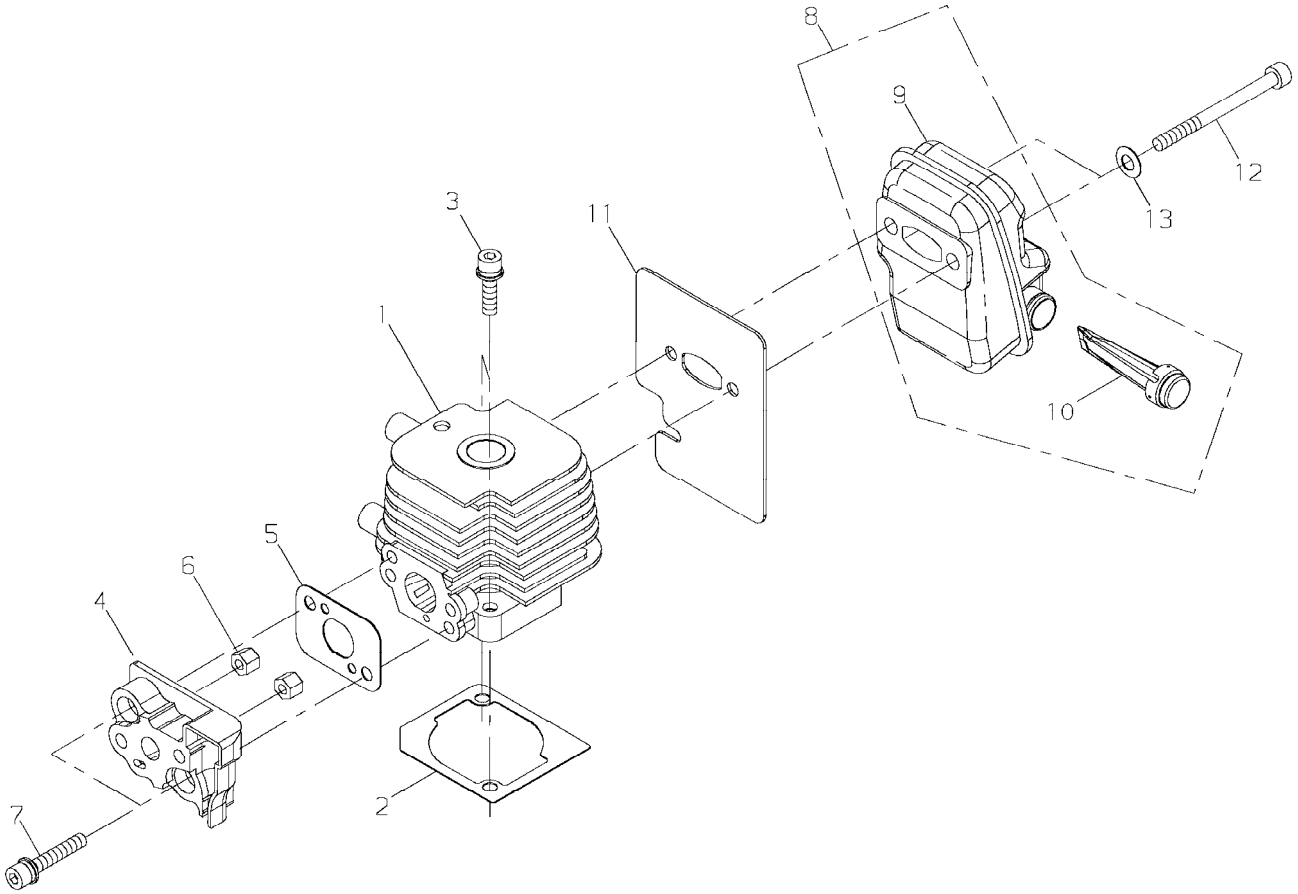
8
9
12
13
3
11
1
10
5
6
4
2
7

PRICE:($)

Ref. No.	Part No.	Part Name	Q`ty	Unit Price($)	Remarks
1-1	20142-12110	CYLINDER	1		
2	20016-12120	GASKET	1		
3	11022-05250	BOLT-SPW	2		M5*25 (SW,PW)
4	20140-12210	INSULATOR	1		
5	20140-12221	GASKET	1		
6	20011-12260	NUT	2		
7	11022-05250	BOLT-SPW	2		M5*25 (SW,PW)
8	67000-15010	MUFFLER ASSY	1		
9	67000-15110	MUFFLER	1		
10	67000-15340	SPARK ARRESTER	1		
11	20140-15120	GASKET	1		
12	01020-05400	BOLT	2		M5*40
13	01610-05080	WASHER	2		5mm T:0.8 MFZN3-C

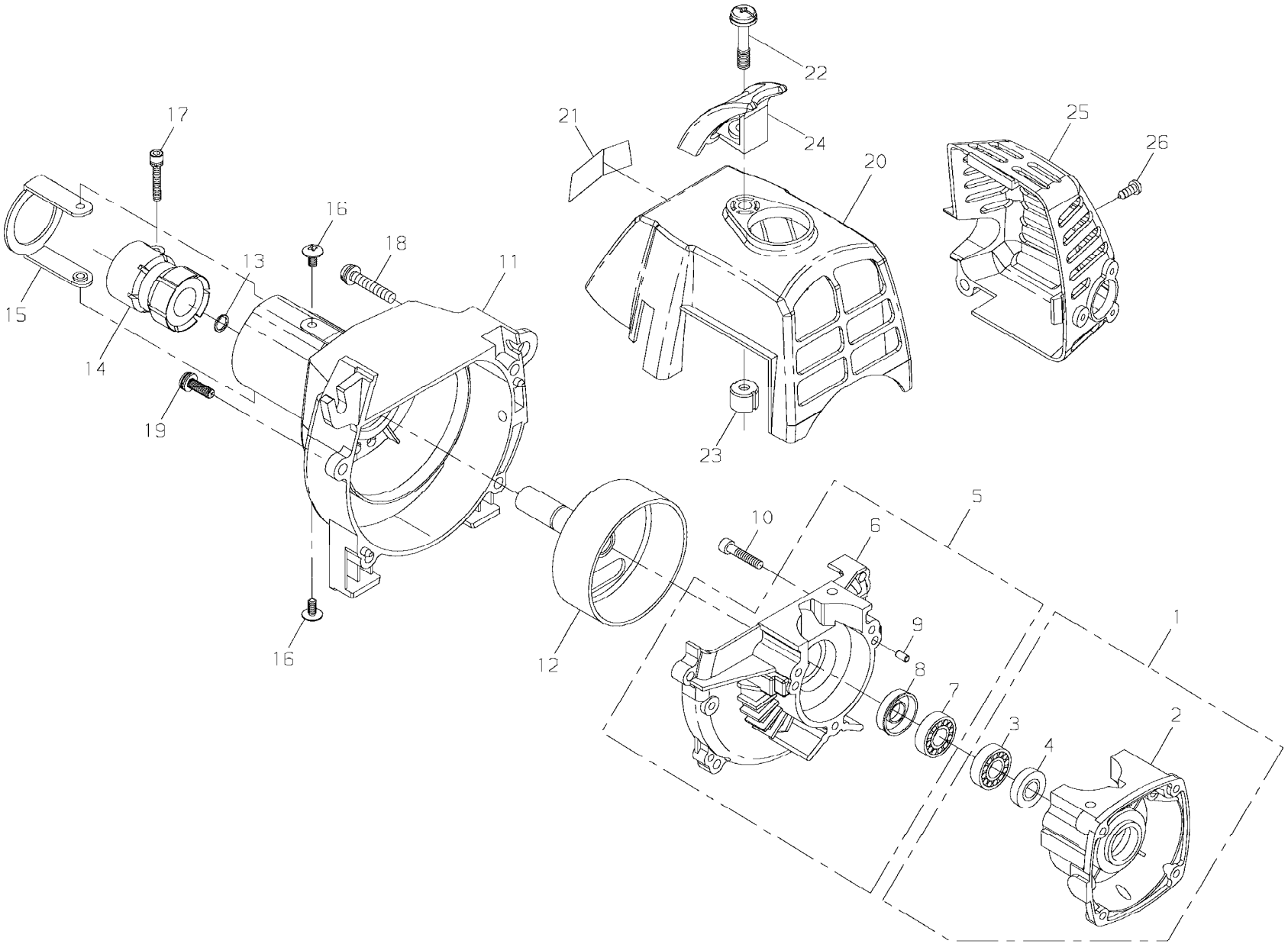
22
17
21
24
25
26
20
16
18
13
11
15
14
19
23
5
10
6
9
1
16
12
8
7
3
2
4

PRICE:($)

Ref. No.	Part No.	Part Name	Q`ty	Unit Price($)	Remarks
2-1	20035-21101	CRANKCASE,S COMP	1		
2	20036-21112	CRANKCASE,S	1		
3	12900-60010	BALL BEARING	1		
4	22150-21250	OIL SEAL	1		
5	20140-21201	CRANKCASE,M COMP	1		
6	20036-21124	CRANKCASE,M	1		
7	12900-60010	BALL BEARING	1		
8	20000-21211	OIL SEAL	1		
9	12492-40080	ROLLER	2		
10	01020-05250	BOLT	3		M5*25
11	20142-31113	FAN COVER	1		
12	70030-31120	CLUTCH DRUM	1		
13	20000-31140	SNAP RING	1		
14	67001-31411	JOINT	1		
15	20142-31420	STOPPER	1		
16	11260-04081	SCREW,ADHESIVE	2		M4*8
17	11020-05220	BOLT-SW	1		M5*22 SW
18	11206-05300	SCREW,PM-SPW	1		
19	11206-05160	SCREW,PM-SPW	1		M5*16
20	20140-32112	CYLINDER COVER	1		
21	62095-91320	LABEL,TRADE	1		
22	20140-31250	SCREW,PM-SLPW	1		
23	20140-31260	INSULATOR	1		
24	20140-34112	PROTECTOR	1		
25	20142-32211	MUFFLER COVER	1		
26	22160-32210	SCREW,PC	1		

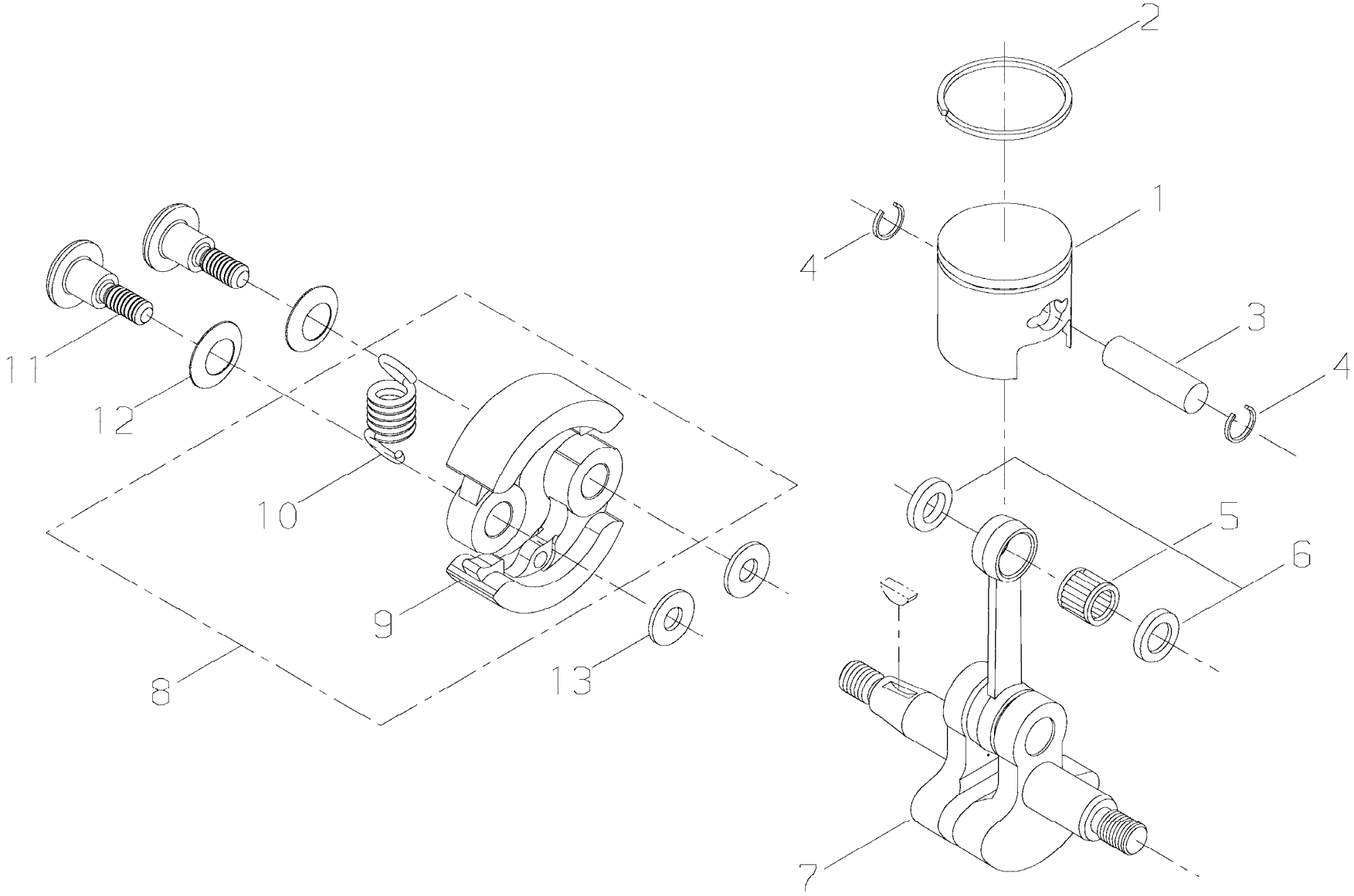
2
1
4
3
4
11
12
10
5
6
9
8
13
7

PRICE:($)

Ref. No.	Part No.	Part Name	Q`ty	Unit Price($)	Remarks
3-1	20142-41111	PISTON	1		
2	20142-41210	PISTON RING	1		
3	20142-41310	PISTON PIN	1		
4	70030-41320	SNAP RING	2		
5	67000-41230	NEEDLE BEARING	1		
6	20016-41340	THRUST WASHER	2		
7	67000-42010	CRANKSHAFT	1		
8	62090-51020	CLUTCH SHOE ASSY	1		
9	20035-51111	*CLUTCH SHOE	2		
10	37013-51310	*COIL SPRING	1		
11	20142-51210	BOLT	2		
12	20087-51231	SPRING PLATE	2		
13	22100-71430	WASHER	2		

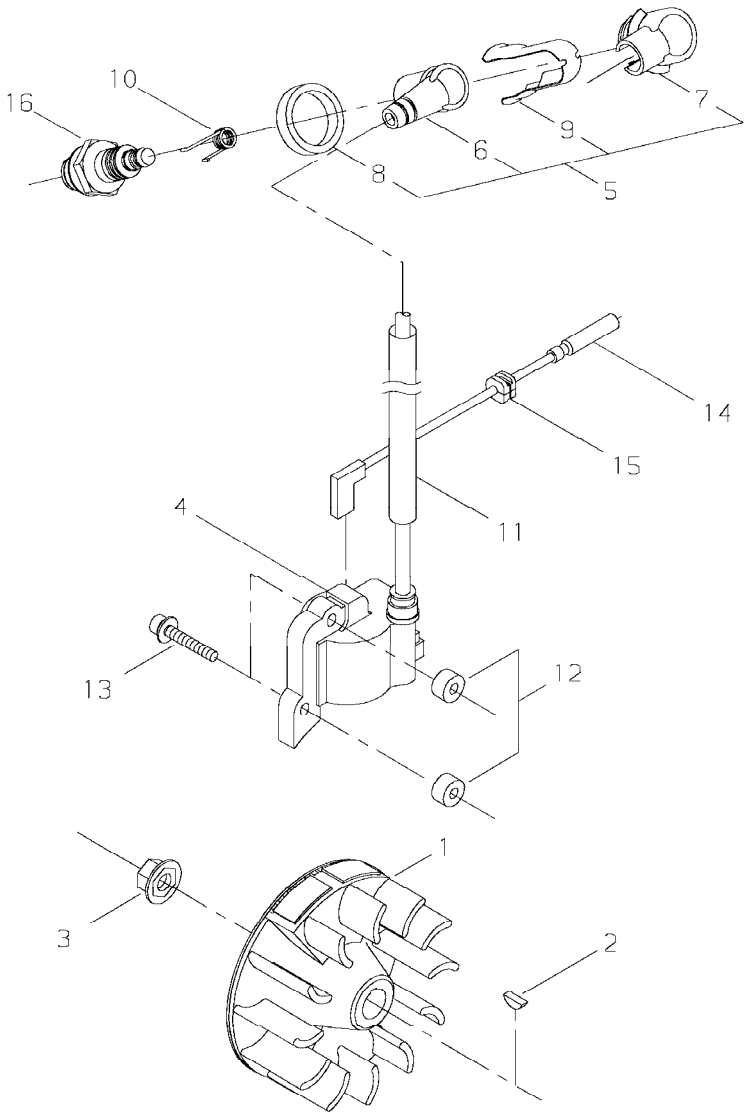
16
10
8
6
9
7
5
14
15
11
4
13
12
1
3
2

PRICE:($)

Ref. No.	Part No.	Part Name	Q`ty	Unit Price($)	Remarks
4-1	20140-71200	ROTOR	1		
2	02403-03100	KEY	1		3*10
3	20035-71220	NUT	1		
4	20140-71600	COIL ASSY	1		
5	70223-72200	PLUG CAP COMP	1		
6	20010-72221	PLUG CAP	1		
7	20000-72241	CAP COVER	1		
8	20000-72250	COVER,BAND	1		
9	70180-72260	SHIELD	1		
10	20000-72230	SPRING,PLUG	1		
11	70064-72111	TUBE	1		
12	70030-71620	INSULATOR	2		
13	11024-04261	BOLT-SLPW	2		M4*26
14	67000-71240	LEAD WIRE	1		
15	20011-72120	GROMMET	1		
16	13000-13406	SPARK PLUG	1		BMR6A

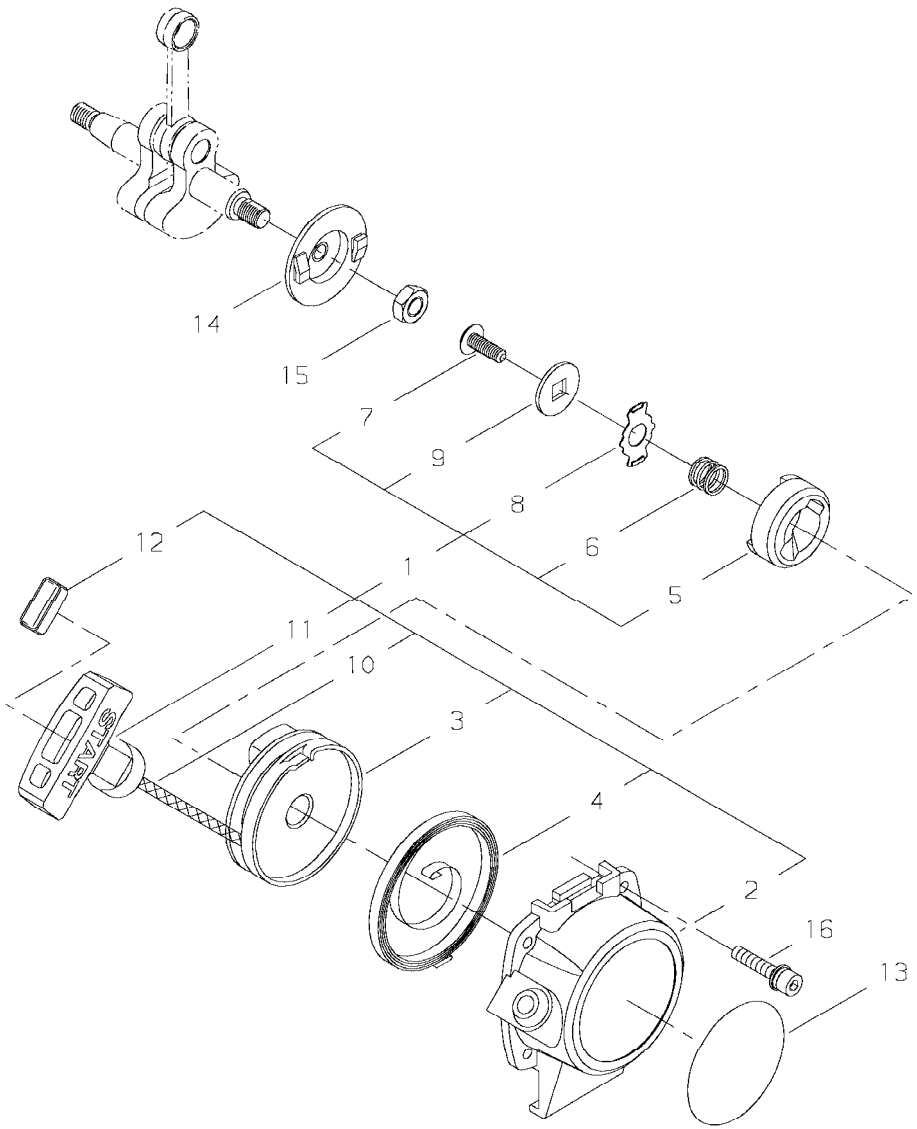
14
15
7
9
8
6
5
12
1
11
10
3
4
2
16
13
START

PRICE:($)

Ref. No.	Part No.	Part Name	Q`ty	Unit Price($)	Remarks
5-1	20140-75900	RECOIL STARTER SUBASSY	1		
2	20140-75110	*STARTER CASE	1		
3	20140-75120	*REEL	1		
4	20140-75130	*SPRING	1		
5	20140-75140	*DOG	1		
6	20140-75150	*BRAKE SPRING	1		
7	20140-75160	*SCREW	1		
8	20140-75170	*RETAINER	1		
9	20140-75180	*WASHER	1		
10	70064-75190	*ROPE	1		
11	70064-75211	*HANDLE	1		
12	70064-75220	*STOPPER	1		
13	62090-91330	LABEL,TRADE	1		
14	20140-75310	STARTER PULLEY	1		
15	01511-08051	NUT	1		M8*5
16	11024-04120	BOLT-SLPW	2		

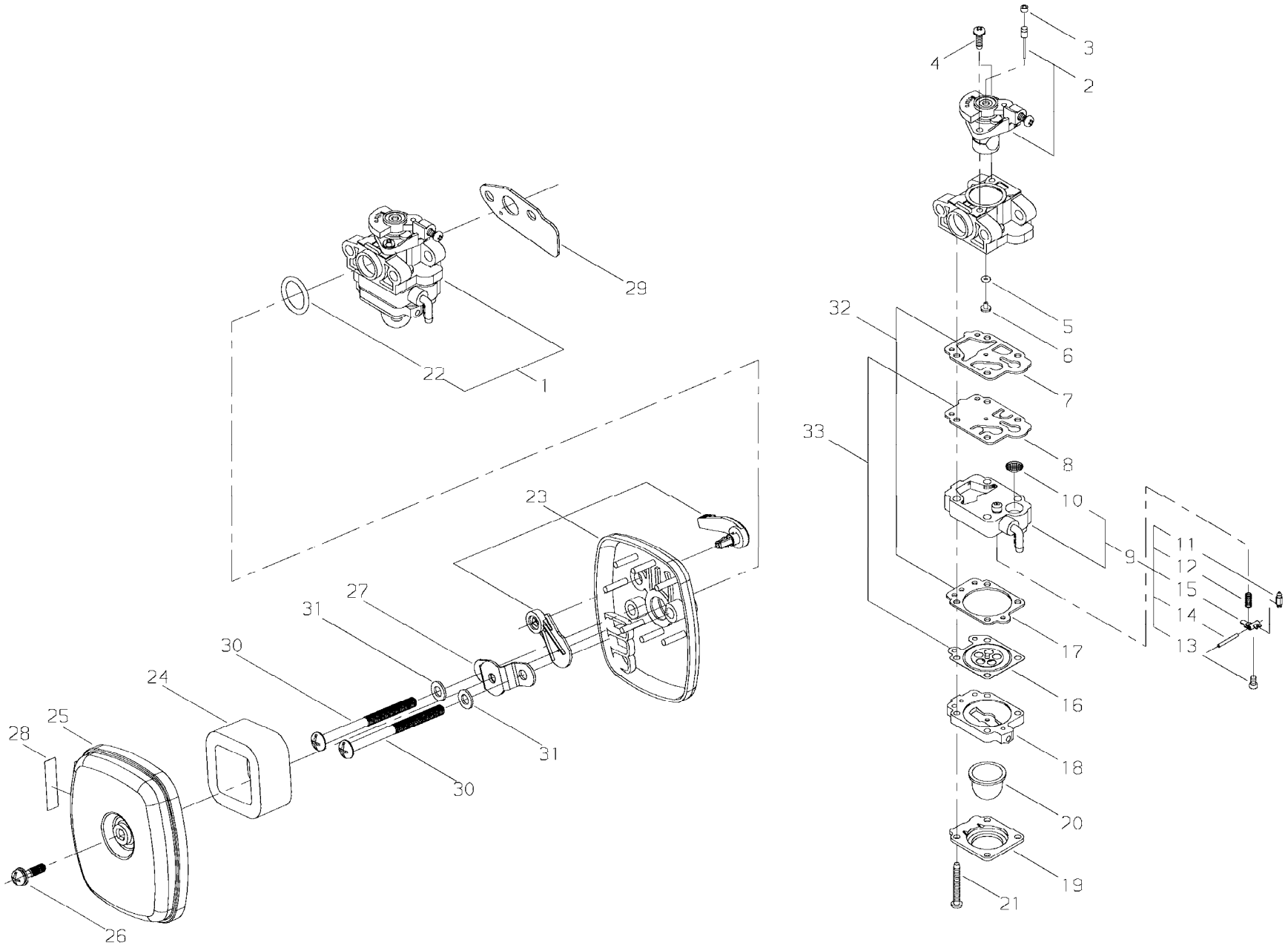
29
22
1
23
27
31
30
24
25
28
31
30
26
4
3
2
5
6
32
7
33
8
10
9
11
12
15
14
13
17
16
18
20
19
21

PRICE:($)

Ref. No.	Part No.	Part Name	Q`ty	Unit Price($)	Remarks
6-1	67000-81010	CARBURETOR ASSY	1		
2	20016-81180	*VALVE ASSY	1		
3	62074-81320	*PLUG	1		
4	70064-81290	*SCREW	2		
5	70097-81220	*O RING	1		
6	67000-81330	*MAIN JET	1		
7	70097-81310	*GASKET,PUMP	1		
8	70097-81320	*DIAPHRAGM	1		
9	72933-81410	PUMP BODY COMP	1		
10	70030-81380	*SCREEN	1		
11	20036-81440	*NEEDLE VALVE	1		
12	72933-81270	*SPRING	1		
13	20016-81450	*SCREW	1		
14	22100-81250	*PIN	1		
15	22100-81230	*LEVER	1		
16	22100-81260	*DIAPHRAGM ASSY	1		
17	20016-81280	*GASKET	1		
18	20016-81420	PUMP BASE COMP	1		
19	20016-81510	PUMP COVER	1		
20	20036-81670	PRIMER PUMP	1		
21	20016-81140	SCREW	4		
22	20016-81250	O RING	1		
23	20140-81700	CLEANER BODY SUBASSY	1		
24	20140-82210	FILTER	1		
25	20140-81790	CLEANER COVER	1		
26	37019-82340	SCREW,PM-SLPW	1		
27	20018-81721	BACK PLATE	1		
28	19404-00008	LABEL,CHOKE	1		
29	20140-81350	GASKET	1		
30	11203-05658	SCREW,PM	2		
31	01610-05080	WASHER	2		
32	20016-81910	GASKET KIT	1		
33	70097-81920	DIAPHRAGM KIT	1		

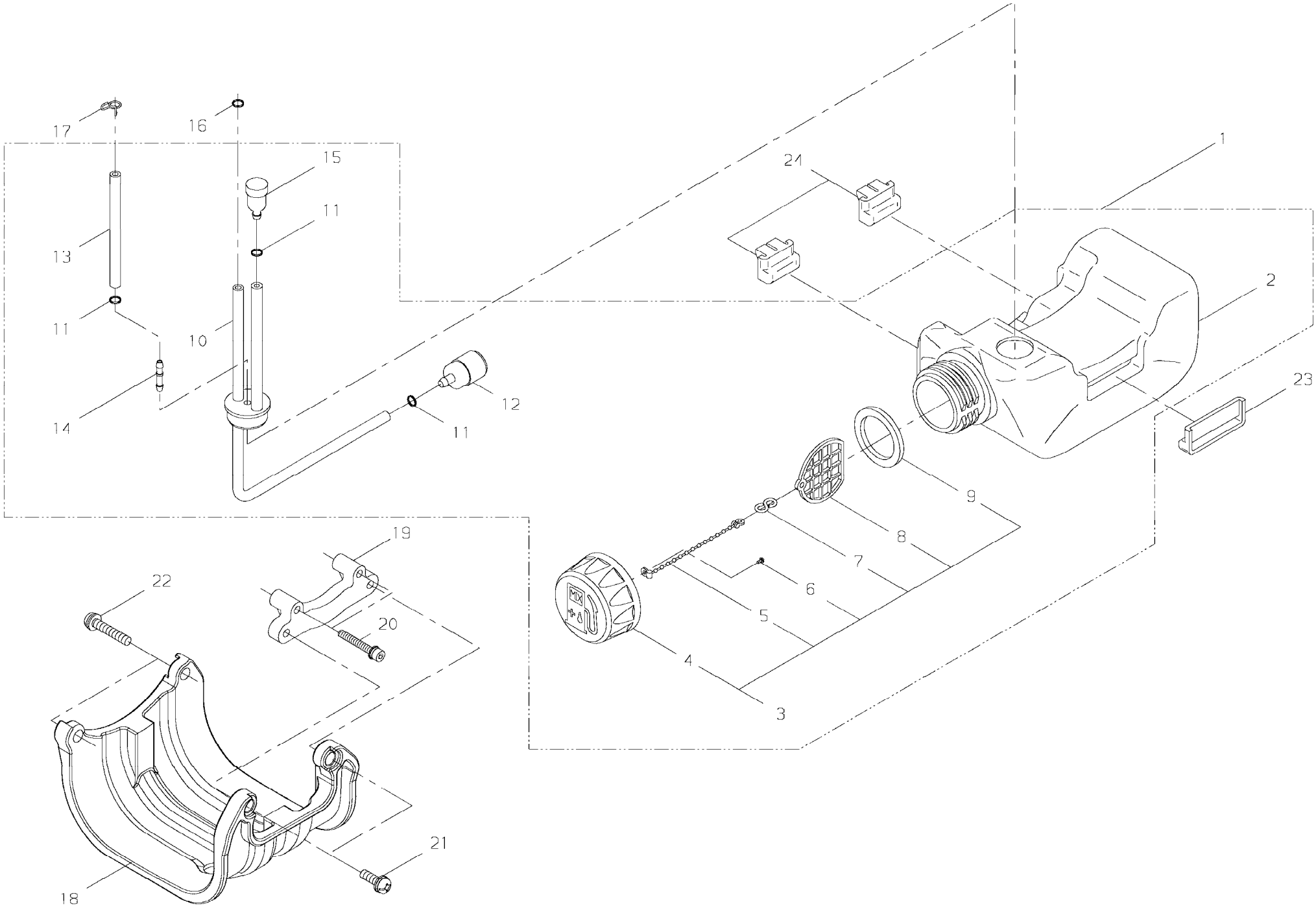
1
2
3
4
5
6
7
8
9
10
11
11
11
12
13
14
15
16
17
18
19
20
21
22
23
24

PRICE:($)

Ref. No.	Part No.	Part Name	Q`ty	Unit Price($)	Remarks
7-1	62002-85013	FUEL TANK ASSY	1		
2	20142-85113	*FUEL TANK	1		
3	70168-85201	*FUEL CAP ASSY	1		
4	70168-85210	**FUEL CAP	1		
5	22128-57250	**CHAIN CAP	1		
6	22155-21330	**HOOK	1		
7	01270-25064	**SCREW,TAPPING	1		
8	22150-21350	**CLIP	1		
9	20000-85221	**GASKET	1		
10	20140-85310	*FUEL PIPE	1		
11	20020-85540	*CLIP	3		
12	20016-85400	*FUEL FILTER	1		
13	20112-85361	*PIPE	1		
14	72933-85620	*JOINT	1		
15	20035-85522	*VALVE	1		
16	20020-85540	CLIP	1		
17	37013-85310	CLIP	1		
18	62902-85320	TANK GUARD	1		
19	67000-86310	BRACKET	1		
20	11024-04300	BOLT-SLPW	2		
21	11206-05180	SCREW,PM-SPW	2		
22	11206-05350	SCREW,PM-SPW	2		
23	20087-86130	TANK CUSHION	1		
24	20087-86141	TANK CUSHION	2		

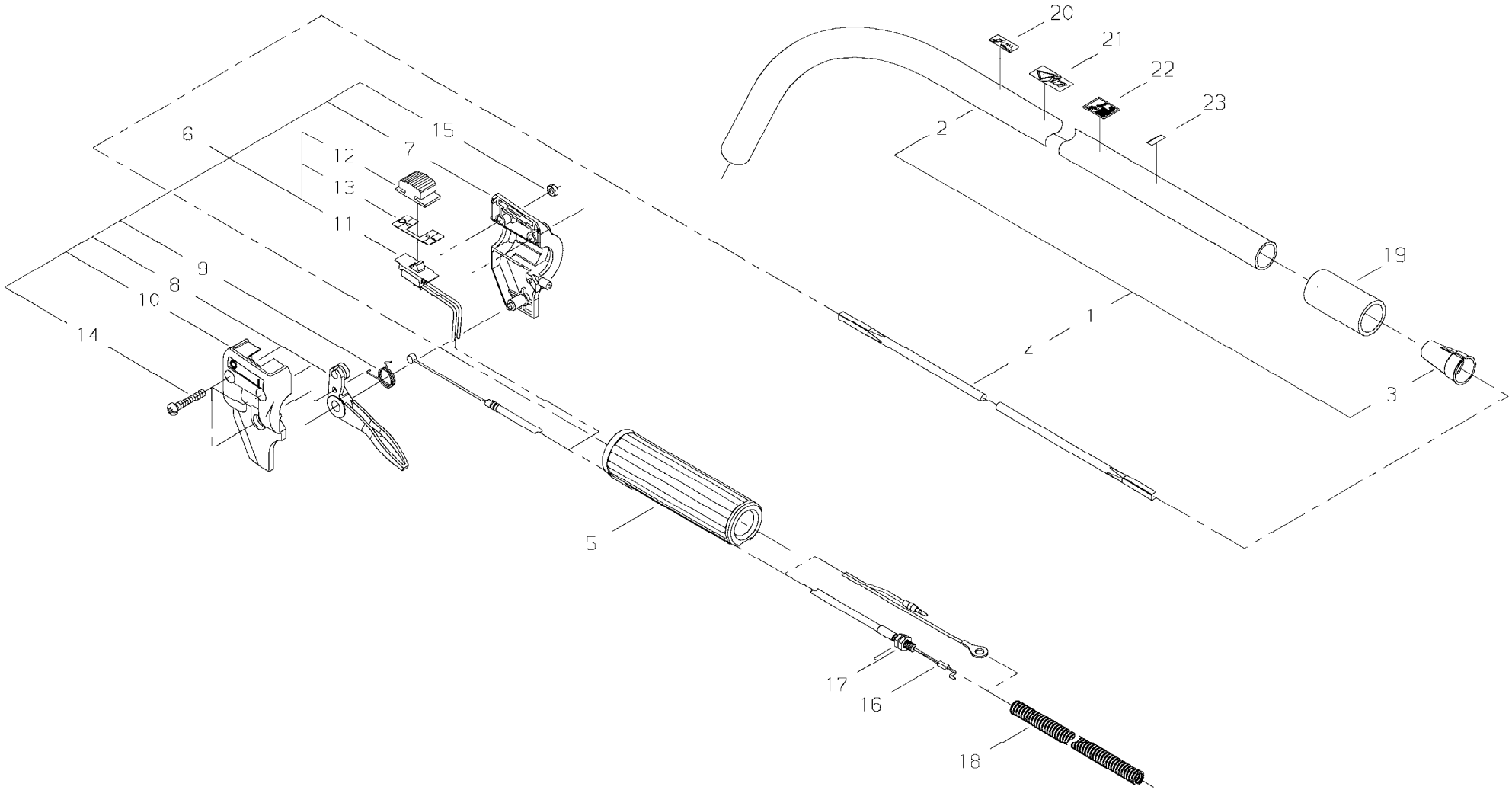
20
21
22
23
2
15
6
12
7
13
11
9
8
10
14
19
1
4
3
5
17
16
18

PRICE:($)

Ref. No.	Part No.	Part Name	Q`ty	Unit Price($)	Remarks
8-1	67001-62021	OUTER PIPE SUBASSY	1		
2	67001-62111	*OUTER PIPE	1		
3	67001-62320	*SPACER	1		
4	67001-62211	*FLEXIBLE SHAFT	1		
5	72414-12130	GRIP	1		
6	67001-62160	THROTTLE LEVER ASSY	1		
7	72414-12612	*BRACKET,RIGHT	1		
8	22410-14321	*LEVER	1		
9	22410-14331	*SPRING	1		
10	72414-12641	*BRACKET,LEFT	1		
11	67000-62310	*SWITCH	1		
12	22420-12930	*KNOB	1		
13	22420-12940	*PLATE	1		
14	11206-05300	*SCREW,PM-SPW	3		
15	01501-05031	*NUT	3		M5 MFZN3-C
16	22550-14510	THROTTLE CABLE	1		
17	01501-06041	NUT	2		M6 MFZN3-C
18	70229-83140	TUBE	1		
19	63061-62310	PROTECTOR	1		
20	19402-00231	LABEL,CAUTION	1		
21	19422-00016	LABEL,CAUTION	1		
22	19404-00035	LABEL,DECIBEL	1		110dB(A)
23	72017-12150	HANDLE LABEL	1		

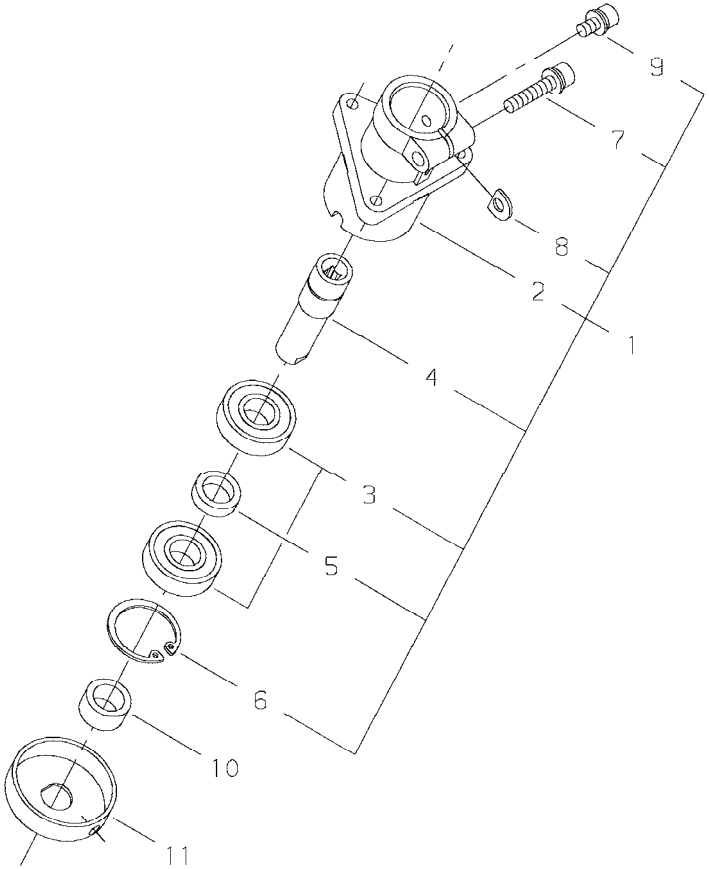
9
7
8
2
1
4
3
5
6
10
11

PRICE:($)

Ref. No.	Part No.	Part Name	Q`ty	Unit Price($)	Remarks
9-1	67001-63010	SHAFT CASE ASSY	1		
2	72097-13110	*SHAFT CASE	1		
3	02006-06001	*BALL BEARING	2		6001DDU
4	72414-13120	*SHAFT	1		
5	72030-13130	*COLLAR,A	1		
6	02432-28120	*SNAP RING	1		
7	11022-05250	*BOLT-SPW	1		M5x25
8	22000-13420	*SHIM	1		
9	11022-05100	*BOLT-SPW	1		M5x10
10	72030-13140	COLLAR, B	1		
11	72030-13151	HOLDER	1		

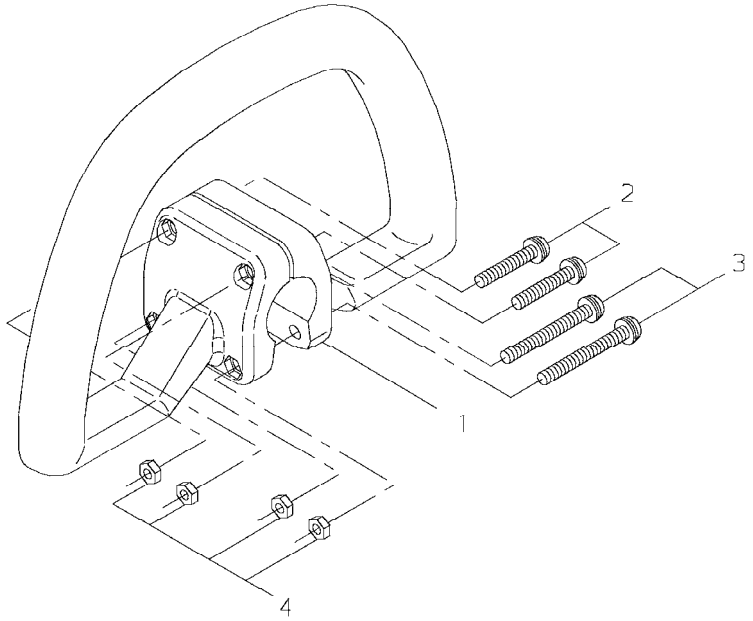
2
3
1
4

PRICE:($)

Ref. No.	Part No.	Part Name	Q`ty	Unit Price($)	Remarks
10-1	72495-14110	HANDLE	1		
2	11207-05300	SCREW,PM-SLPW	2		M5*30
3	11207-05450	SCREW,PM-SLPW	2		M5*45
4	01500-05041	NUT	4		M5 MFZN3-C

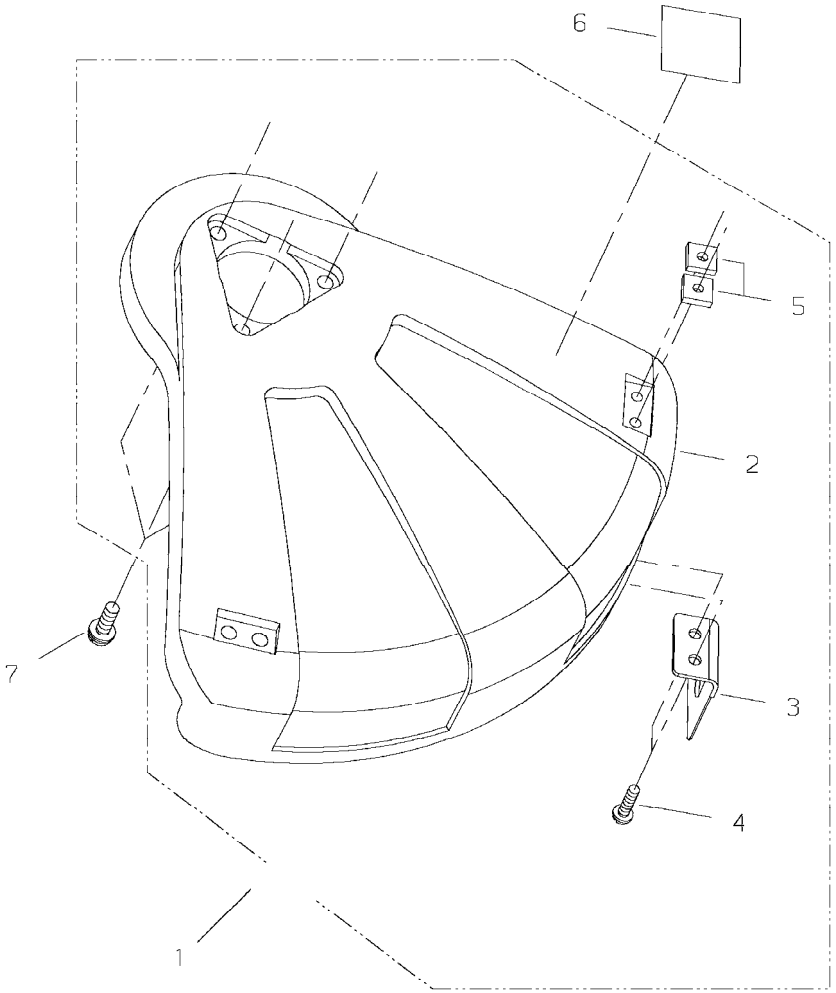
6
5
2
7
3
4
1

PRICE:($)

Ref. No.	Part No.	Part Name	Q`ty	Unit Price($)	Remarks
11-1	64110-66311	GUARD ASSY	1		
2	72030-16117	*GUARD	1		
3	67001-66310	*CUTTER	1		
4	11204-04160	*SCREW,PM-SW	2		M4x16
5	72030-16151	*NUT	2		
6	72030-16140	CAUTION PLATE	1		
7	11206-05160	SCREW,PM-SPW	3		M5x16

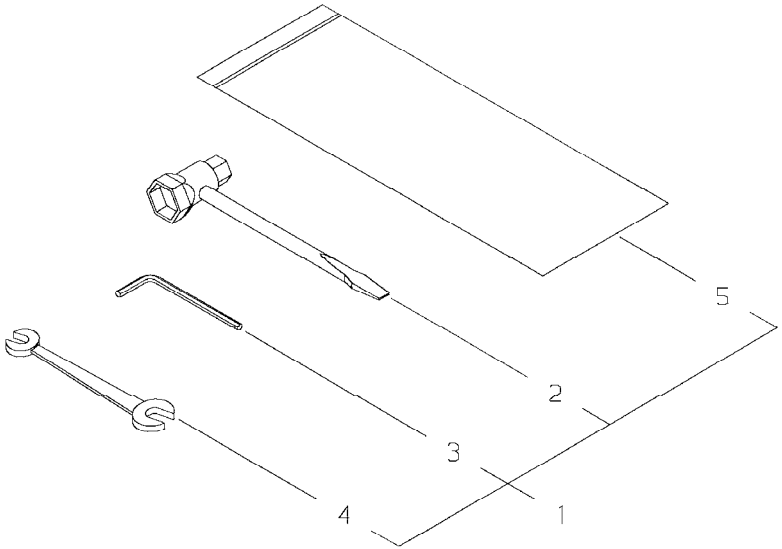
5
2
3
1
4

PRICE:($)

Ref. No.	Part No.	Part Name	Q`ty	Unit Price($)	Remarks
12-1	22410-91000	TOOL SET	1		
2	22000-91181	*PLUG WRENCH	1		
3	09026-04001	*HEXA-WRENCH	1		4mm
4	22000-91120	*SPANNER	1		
5	19639-01400	*POLY-BAG	1		