shindaiwa

PARTS PRICE LIST

T230S

Shindaiwa Corporation

6-2-11,Ozuka-Nishi, Asaminami-ku, Hiroshima, 731-3167, Japan
Telephone (082) 849-2005 Fax (082) 849-2481

T230S／EC1
MAR. 2, 2009
Printed in Japan

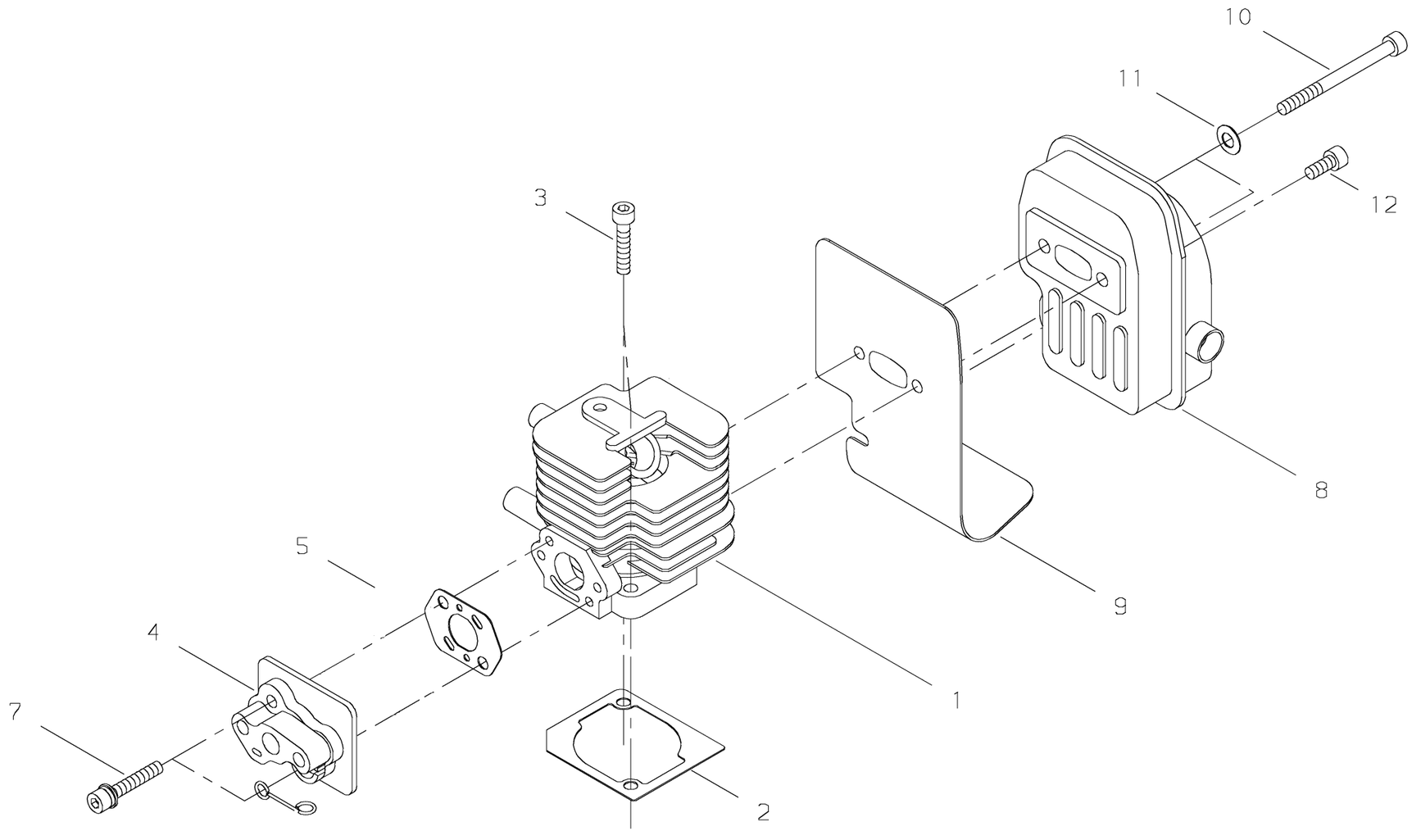
10
11
12
3
8
5
9
4
1
7
2

PRICE:($)

Ref. No.	Part No.	Part Name	Q`ty	Unit Price($)	Remarks
1-1	62809-12111	CYLINDER	1		
2	20016-12120	GASKET	1		
3	01020-05250	BOLT	2		M5*25
4	20016-12213	INSULATOR	1		
5	20016-12222	GASKET	1		
6					
7	11022-05300	BOLT-SPW	2		
8	70135-15110	MUFFLER	1		
9	20016-15123	GASKET	1		
10	01020-05500	BOLT	2		M5*50
11	01610-05080	WASHER	2		5mm T:0.8 MFZN3-C
12	01020-05120	BOLT	1		M5*12

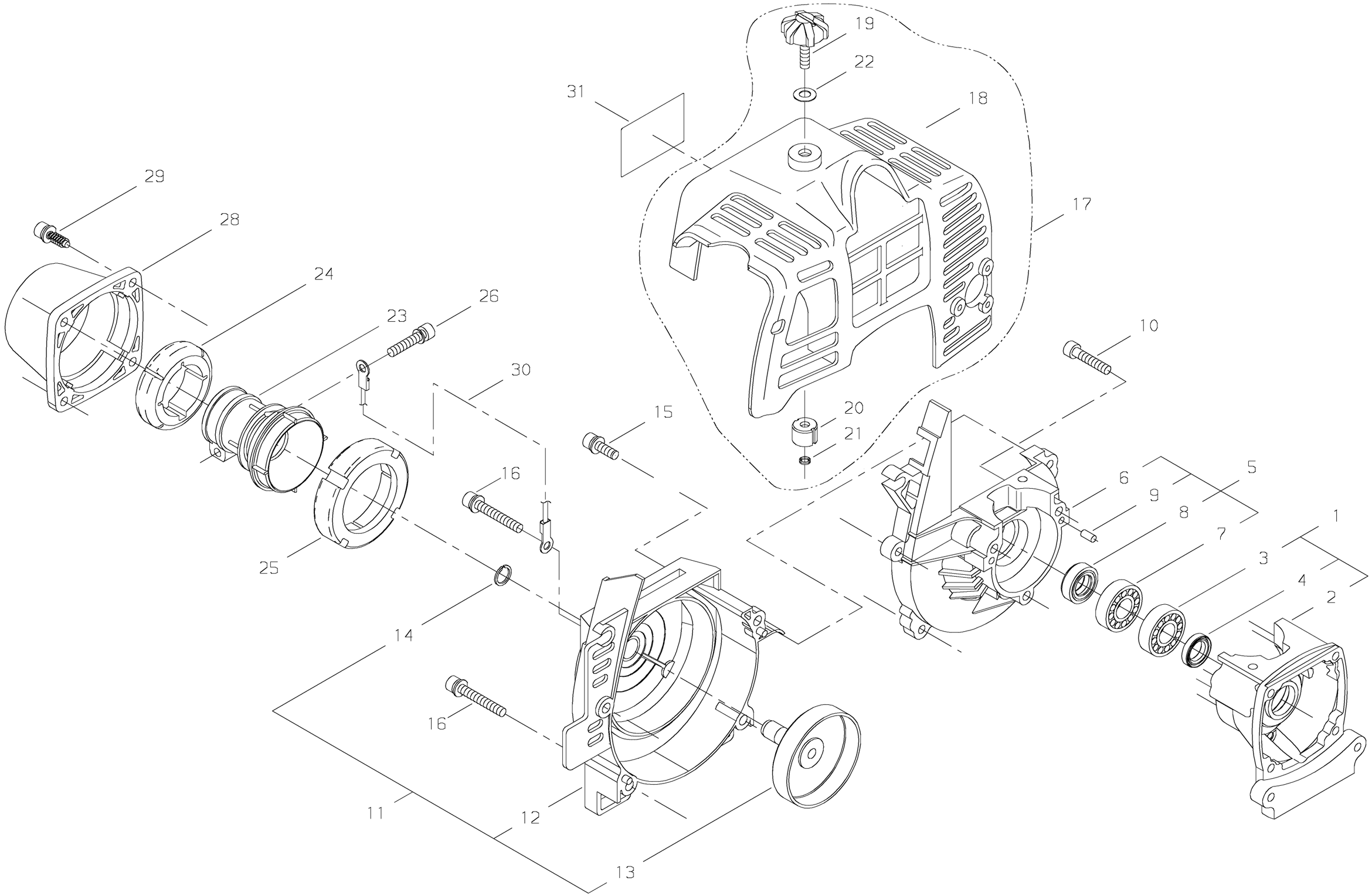
19
22
31
18
17
29
28
24
26
23
10
30
15
20
21
16
6
5
9
8
1
7
3
4
2
25
14
16
11
12
13

PRICE:($)

Ref. No.	Part No.	Part Name	Q`ty	Unit Price($)	Remarks
2-1	20016-21100	CRANKCASE,S COMP	1		
2	20016-21111	*CRANKCASE,S	1		
3	12900-60010	*BALL BEARING	1		6001
4	22150-21250	*OIL SEAL	1		
5	20016-21200	CRANKCASE,M COMP	1		
6	20016-21120	*CRANKCASE,M	1		
7	12900-60010	*BALL BEARING	1		6001
8	20000-21211	*OIL SEAL	1		
9	12492-40080	*ROLLER	2		
10	01020-05250	BOLT	3		M5x25
11	62078-31010	FAN COVER ASSY	1		
12	70140-31112	*FAN COVER	1		
13	20016-31212	*CLUTCH DRUM	1		
14	20000-31140	*SNAP RING	1		
15	11022-05160	BOLT-SPW	2		M5x16
16	11022-05450	BOLT-SPW	2		M5x45 SPW
17	37027-32100	CYLINDER COVER ASSY	1		
18	70140-32111	*CYLINDER COVER	1		
19	20018-31251	*KNOB	1		
20	20018-31260	*INSULATOR	1		
21	20018-31270	*CLIP	1		
22	20024-81790	*CONE WASHER	1		
23	20018-31411	JOINT	1		
24	20018-31420	FRONT CUSHION	1		
25	20018-31430	REAR CUSHION	1		
26	11023-05250	BOLT-DW	1		M5x25
28	70135-31470	CAP	1		
29	70140-31480	BOLT,PC	4		
30	70192-31510	EARTH CORD	1		
31	62110-91320	LABEL,TRADE	1		

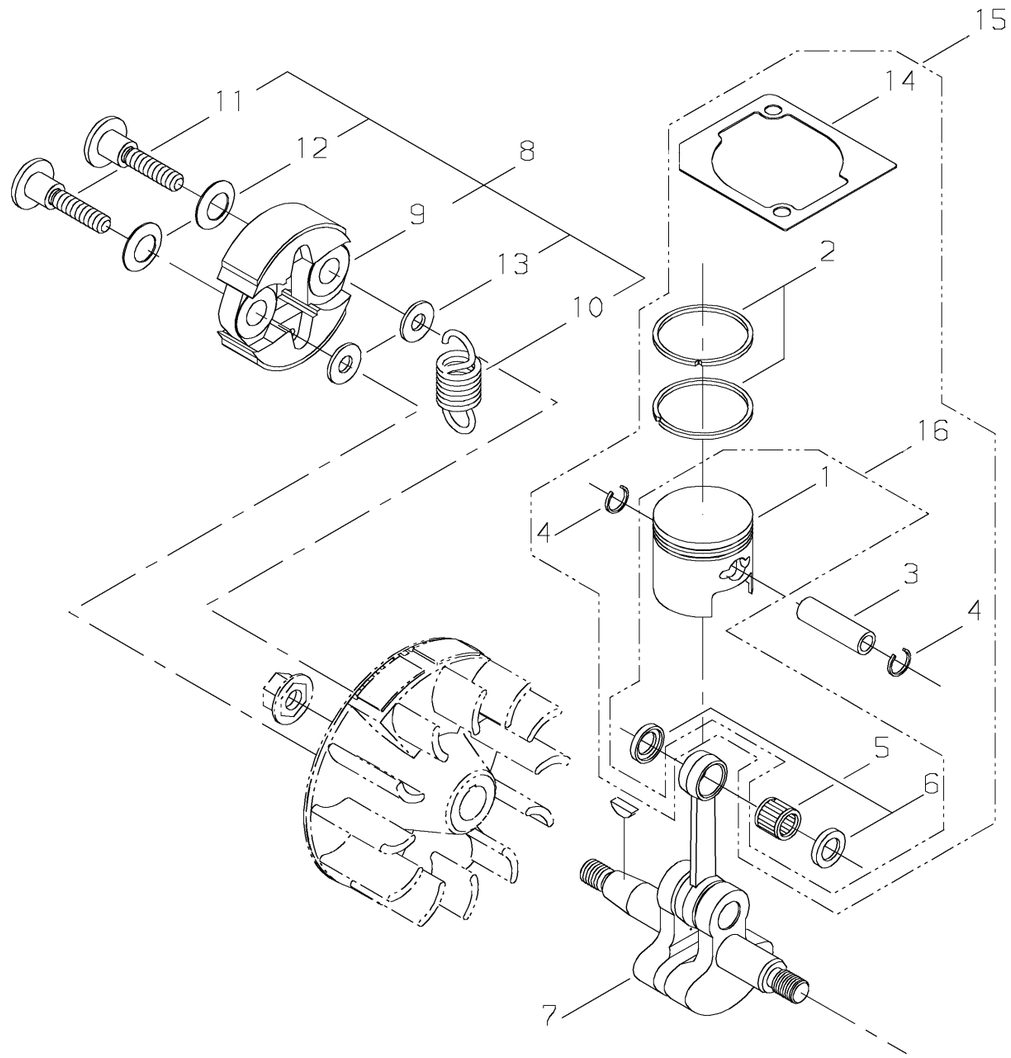
15
14
11
12
8
9
13
10
2
16
1
4
3
4
5
6
7

PRICE:($)

Ref. No.	Part No.	Part Name	Q`ty	Unit Price($)	Remarks
3-1	20075-41111	*PISTON	1		
2	20000-41210	*PISTON RING	2		
3	20075-41310	*PISTON PIN	1		
4	70030-41320	*SNAP RING	2		
5	37013-41230	*NEEDLE BEARING	1		
6	37013-41240	*THRUST WASHER	2		
7	20016-42002	CRANKSHAFT	1		
8	20087-51101	CLUTCH SHOE ASSY	1		
9	20035-51111	*CLUTCH SHOE	2		
10	20035-51221	*SPRING	1		
11	20087-51210	*BOLT	2		
12	20087-51231	*SPRING PLATE	2		
13	22100-71430	*WASHER	2		
14	20016-12120	*GASKET	1		
15	70234-98011	PISTON SET	1		
16	70234-98310	PISTON SET	1		

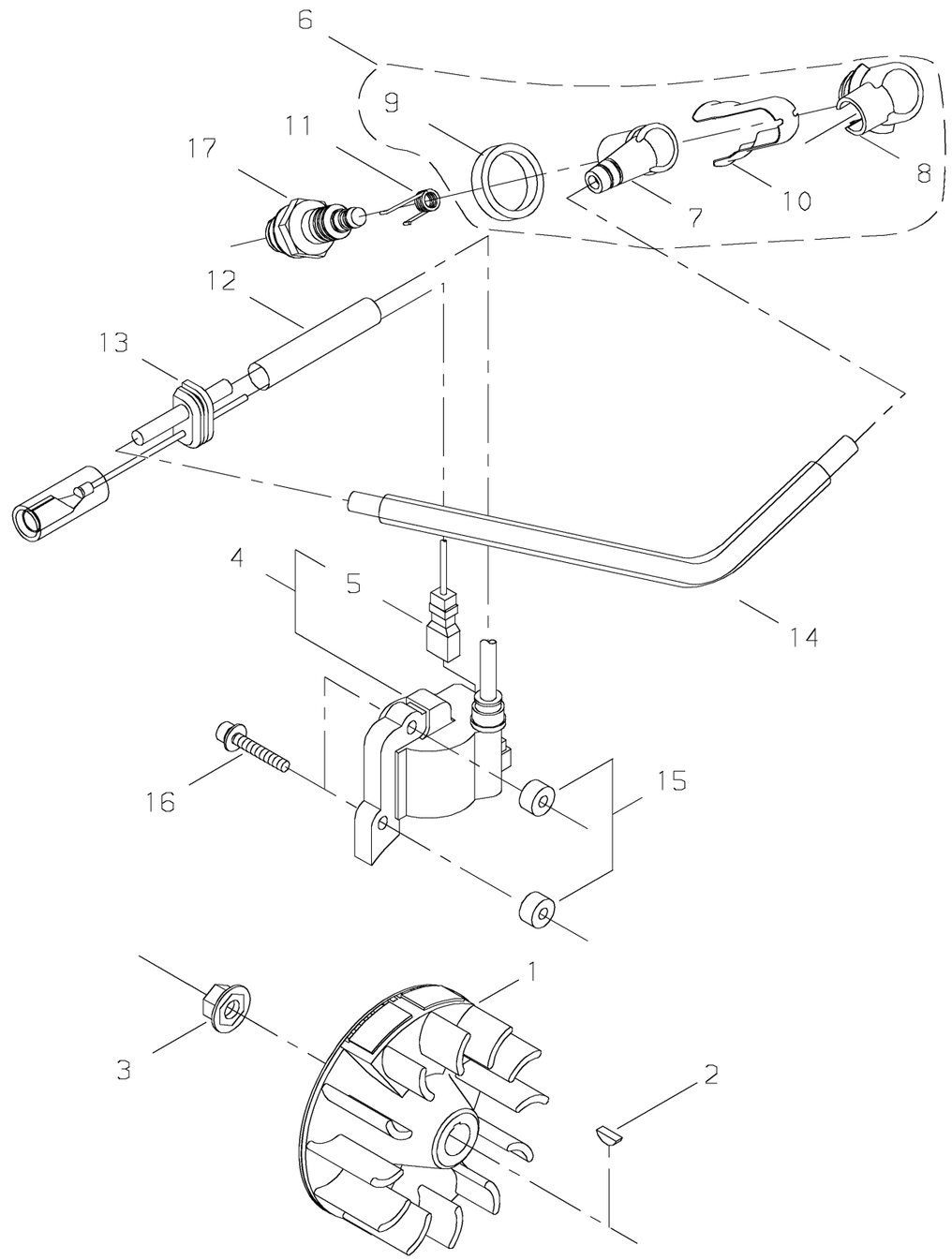
6
9
11
17
8
10
7
12
13
4
5
14
16
15
1
3
2

PRICE:($)

Ref. No.	Part No.	Part Name	Q`ty	Unit Price($)	Remarks
4-1	20016-71200	ROTOR	1		
2	02403-03100	KEY	1		
3	20035-71220	NUT	1		
4	20016-71601	COIL ASSY	1		
5	20016-71641	*CORD	1		
6	70223-72200	PLUG CAP COMP	1		
7	20010-72221	*PLUG CAP	1		
8	20000-72241	*CAP COVER	1		
9	20000-72250	*COVER,BAND	1		
10	70180-72260	*SHIELD	1		
11	20000-72230	SPRING,PLUG	1		
12	20016-71651	TUBE	1		L50
13	20010-72110	GROMMET	1		
14	20016-71660	TUBE	1		L125
15	70030-71620	INSULATOR	2		
16	11024-04261	BOLT-SLPW	2		M4×26
17	13000-13406	SPARK PLUG	1		BMR6A

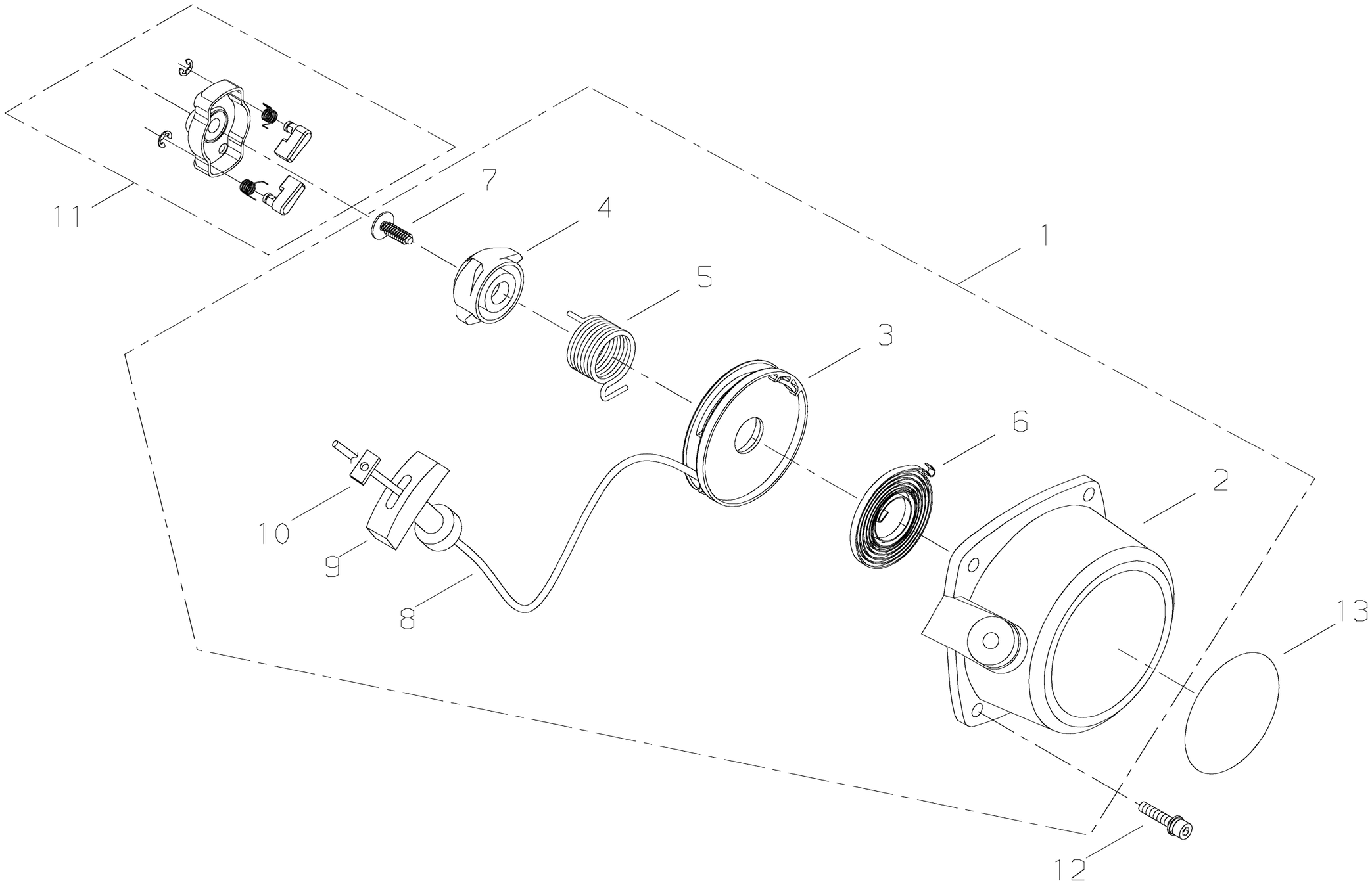
11
7
4
1
5
3
6
2
10
9
8
13
12

PRICE:($)

Ref. No.	Part No.	Part Name	Q`ty	Unit Price($)	Remarks
5-1	37076-75010	RECOIL STARTER ASSY	1		
2	37076-75110	*STARTER CASE	1		
3	37076-75120	*REEL	1		
4	37076-75310	*CAM	1		
5	37076-75320	*COIL SPRING	1		
6	70030-75130	*RECOIL SPRING	1		
7	37013-75310	*SCREW	1		
8	37076-75140	*ROPE	1		
9	20010-75190	*STARTER KNOB	1		
10	20010-75210	*STOPPER	1		
11	62110-75020	STARTER PULLEY ASSY	1		
12	11060-04122	BOLT,ADHESIVE	4		M4x12
13	70117-75311	NAME PLATE	1		

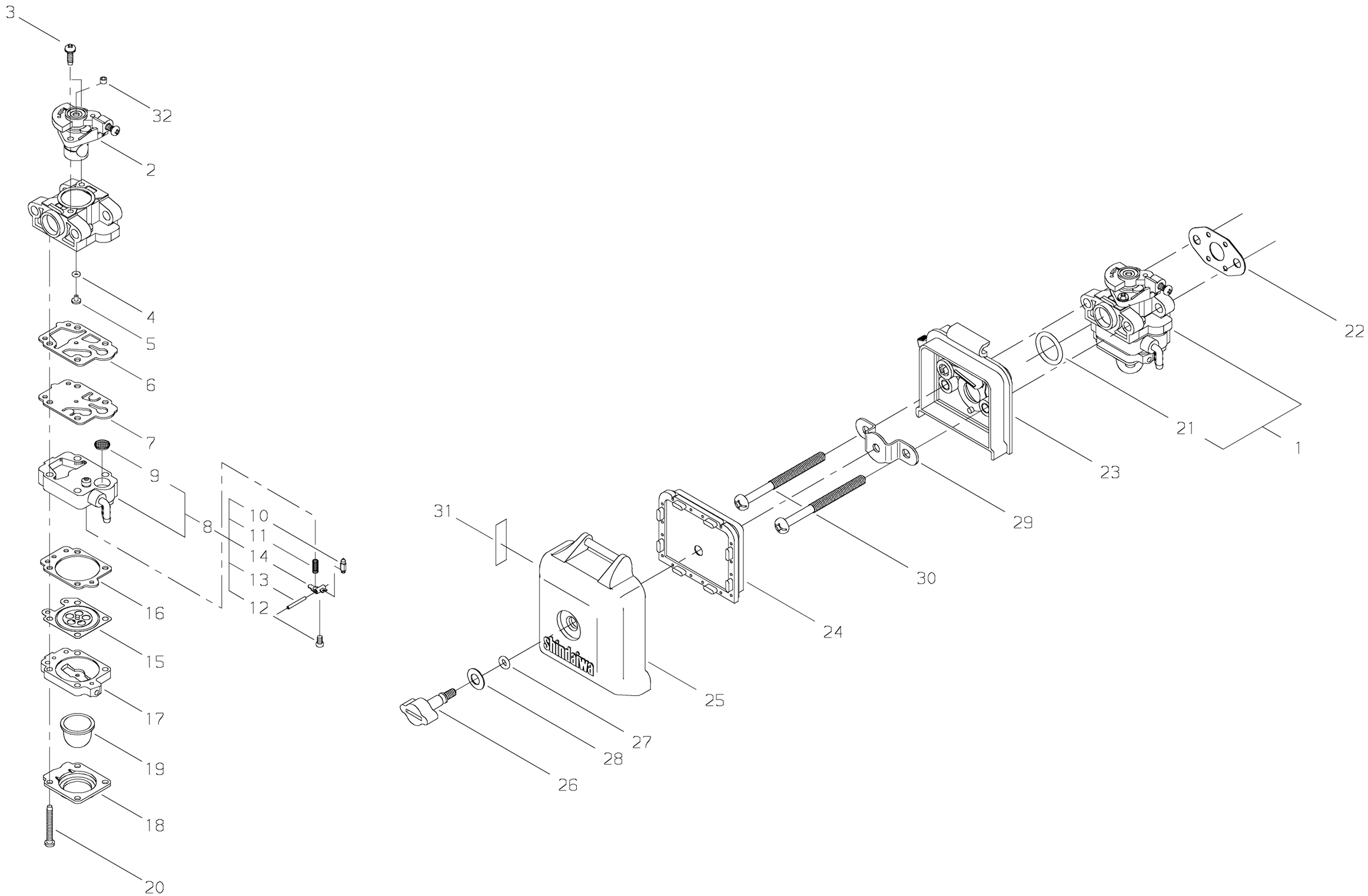
3
32
2
4
5
6
7
9
8
10
11
14
13
12
16
15
17
19
18
20
22
21
1
23
29
30
24
31
25
27
28
26
Shimaiwa

PRICE:($)

Ref. No.	Part No.	Part Name	Q`ty	Unit Price($)	Remarks
6-1	62064-81011	CARBURETOR ASSY	1		
2	20016-81180	*VALVE ASSY	1		
3	70064-81290	*SCREW	2		
4	70097-81220	*O RING	1		
5	62064-81310	*MAIN JET	1		
6	70097-81310	*GASKET,PUMP	1		
7	70097-81320	*DIAPHRAGM	1		
8	20016-81410	*PUMP BODY COMP	1		
9	70030-81380	**SCREEN	1		
10	20036-81440	**NEEDLE VALVE	1		
11	20016-81270	**SPRING	1		
12	20016-81450	**SCREW	1		
13	22100-81250	**PIN	1		
14	22100-81230	**LEVER	1		
15	37013-81310	*DIAPHRAGM	1		
16	20016-81280	*GASKET	1		
17	20016-81420	*PUMP BASE COMP	1		
18	20016-81510	*PUMP COVER	1		
19	20036-81670	*PRIMER PUMP	1		
20	20016-81140	*SCREW	4		
21	20016-81250	*O RING	1		
22	20016-81530	GASKET	1		
23	70140-81710	CLEANER BODY COMP	1		
24	60023-98031	FILTER	1		
25	70140-81760	CLEANER COVER	1		
26	20115-81780	KNOB,CLEANER COVER	1		
27	22100-82430	O RING	1		
28	20024-81790	CONE WASHER	1		
29	20018-81721	BACK PLATE	1		
30	11203-05608	SCREW,PM	2		M5×60
31	19404-00008	LABEL,CHOKE	1		
32	62074-81320	*PLUG	1		

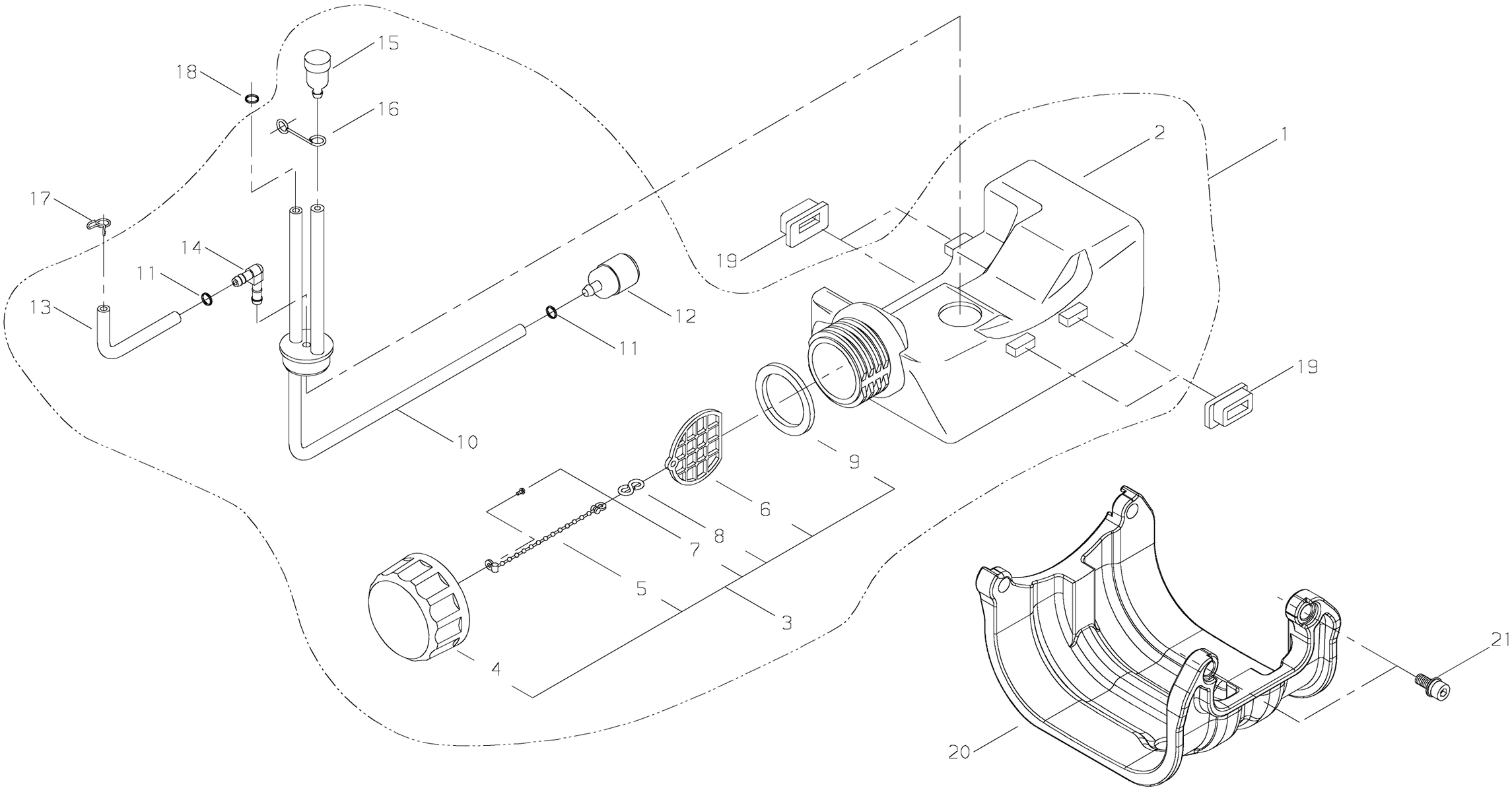
1
2
3
4
5
6
7
8
9
10
11
11
12
13
14
15
16
17
18
19
19
20
21

PRICE:($)

Ref. No.	Part No.	Part Name	Q`ty	Unit Price($)	Remarks
7-1	70192-85001	FUEL TANK ASSY	1		
2	20016-85112	*FUEL TANK	1		
3	70168-85201	*FUEL CAP ASSY	1		
4	70168-85210	**FUEL CAP	1		
5	22128-57250	**CHAIN CAP	1		
6	22155-21330	**HOOK	1		
7	01270-25064	**SCREW,TAPPING	1		
8	22150-21350	**CLIP	1		
9	20000-85221	**GASKET	1		
10	20016-85310	*FUEL PIPE	1		
11	20020-85540	*CLIP	2		
12	20016-85400	*FUEL FILTER	1		
13	20089-83311	*PIPE	1		
14	20087-85340	*JOINT	1		
15	20035-85522	*VALVE	1		
16	20016-12310	*VALVE HOLDER	1		
17	37013-85310	CLIP	1		
18	20020-85540	CLIP	1		
19	20024-86120	TANK CUSHION	4		
20	62902-85320	TANK GUARD	1		
21	11022-05160	BOLT-SPW	2		M5x16

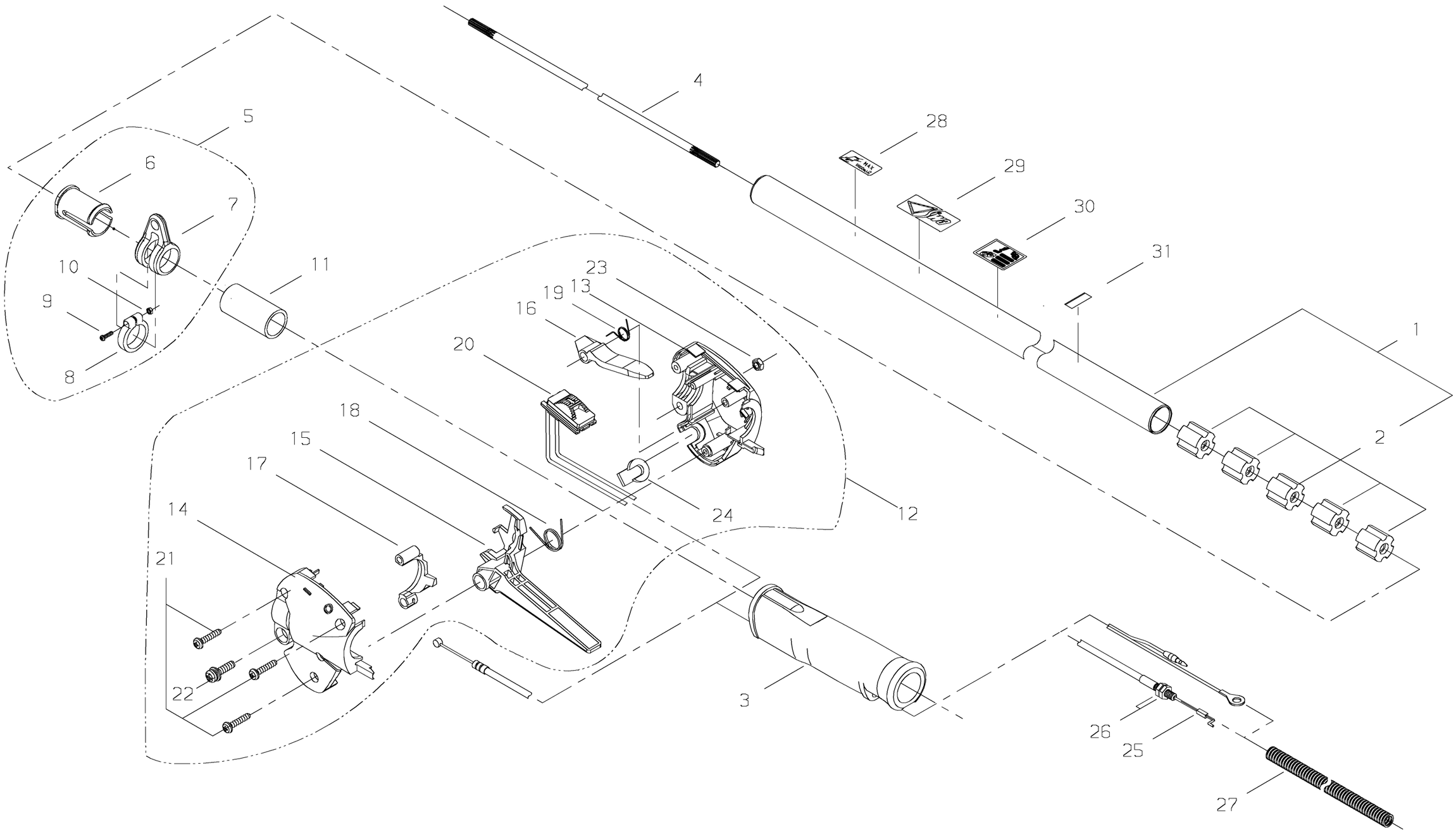
4
28
29
30
31
5
6
7
10
9
8
11
23
19
13
16
20
18
15
17
14
21
22
24
12
1
2
3
26
25
27

PRICE:($)

Ref. No.	Part No.	Part Name	Q`ty	Unit Price($)	Remarks
8-1	72432-12100	OUTER PIPE COMP	1		
2	22035-12121	*BUSH	5		
3	63901-62142	GRIP	1		
4	22070-12410	MAIN SHAFT	1		
5	33008-62340	HANGER ASSY	1		
6	33008-62321	*COLLAR	1		
7	33008-62151	*HANGER	1		
8	33008-62311	*CLAMP	1		
9	11203-04160	*SCREW,PM	1		M4*16
10	01500-04031	*NUT	1		M4 MFZN3-C
11	65006-62310	PROTECTOR	1		
12	63076-62021	THROTTLE LEVER ASSY	1		
13	63002-62320	*BODY,RIGHT	1		
14	63002-62330	*BODY,LEFT	1		
15	63002-62340	*LEVER	1		
16	63901-62352	*LOCK LEVER	1		
17	63002-62350	*HOLDER	1		
18	63880-65350	*COIL SPRING	1		
19	63901-62370	*COIL SPRING	1		
20	63076-62310	*SWITCH	1		
21	63880-65360	*SCREW,TAPPING	3		
22	11206-05201	*SCREW,PM-SPW	1		M5*20
23	01501-05030	*NUT	1		
24	63880-65411	*PLUG	1		
25	63002-62170	THROTTLE CABLE	1		
26	01501-06041	NUT	2		M6 MFZN3-C
27	22422-14540	TUBE	1		
28	19402-00223	LABEL,CAUTION	1		MAX 8500MIN-1
29	19422-00010	LABEL,CAUTION	1		
30	19404-00036	LABEL,DECIBEL	1		111dB(A)
31	72017-12150	HANDLE LABEL	1		

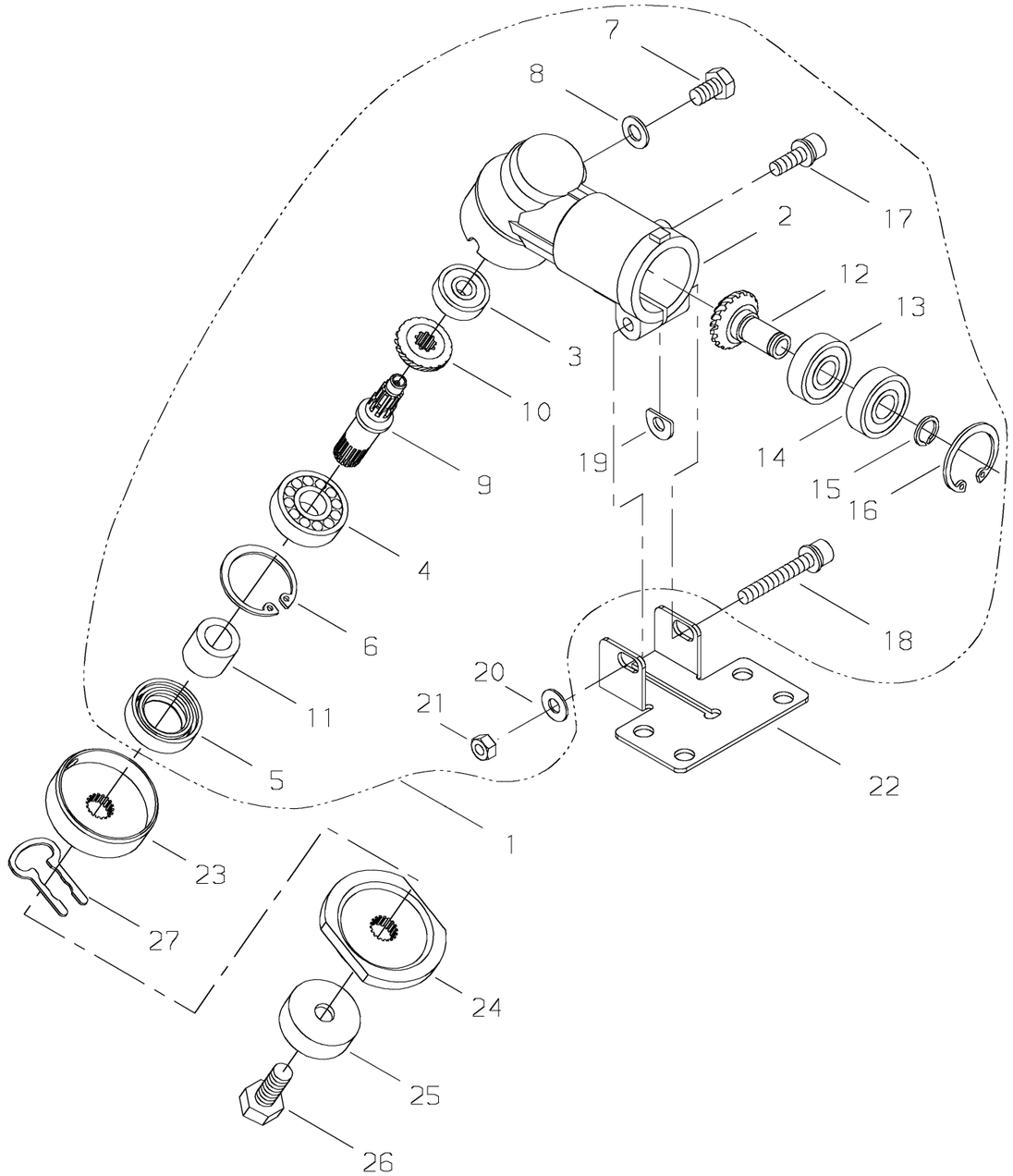
7
8
17
2
12
13
3
10
19
14
9
15
16
4
18
6
20
11
21
5
22
1
23
27
24
25
26

PRICE:($)

Ref. No.	Part No.	Part Name	Q`ty	Unit Price($)	Remarks
9-1	63901-63022	GEAR CASE SUBASSY	1		
2	22035-13113	*GEAR CASE	1		
3	02006-00626	*BALL BEARING	1		626DDU
4	02000-06000	*BALL BEARING	1		6000
5	22035-13140	*OIL SEAL	1		
6	02432-26120	*SNAP RING	1		φ26
7	01014-06100	*BOLT	1		
8	22000-13410	*GASKET	1		
9	22410-13210	*GEAR SHAFT	1		
10	22035-13220	*BEVEL GEAR	1		
11	22035-13230	*COLLAR	1		
12	22035-13391	*BEVEL PINION SET	1		
13	02000-00608	*BALL BEARING	1		608
14	02002-00608	*BALL BEARING	1		608ZZ
15	22035-13340	*SNAP RING	1		
16	02432-22100	*SNAP RING	1		φ22
17	11022-05160	*BOLT-SPW	1		M5×16
18	11022-05350	*BOLT-SPW	1		M5×35
19	22000-13420	*SHIM	1		
20	01613-05080	*WASHER	1		
21	01500-05041	*NUT	1		
22	72480-16130	LOWER CLAMP	1		
23	22035-13242	HOLDER,A	1		
24	22410-13251	HOLDER,B	1		
25	22035-13290	BOLT GUARD	1		
26	22035-13271	BOLT	1		
27	22410-13530	SLIDE CLIP	1		

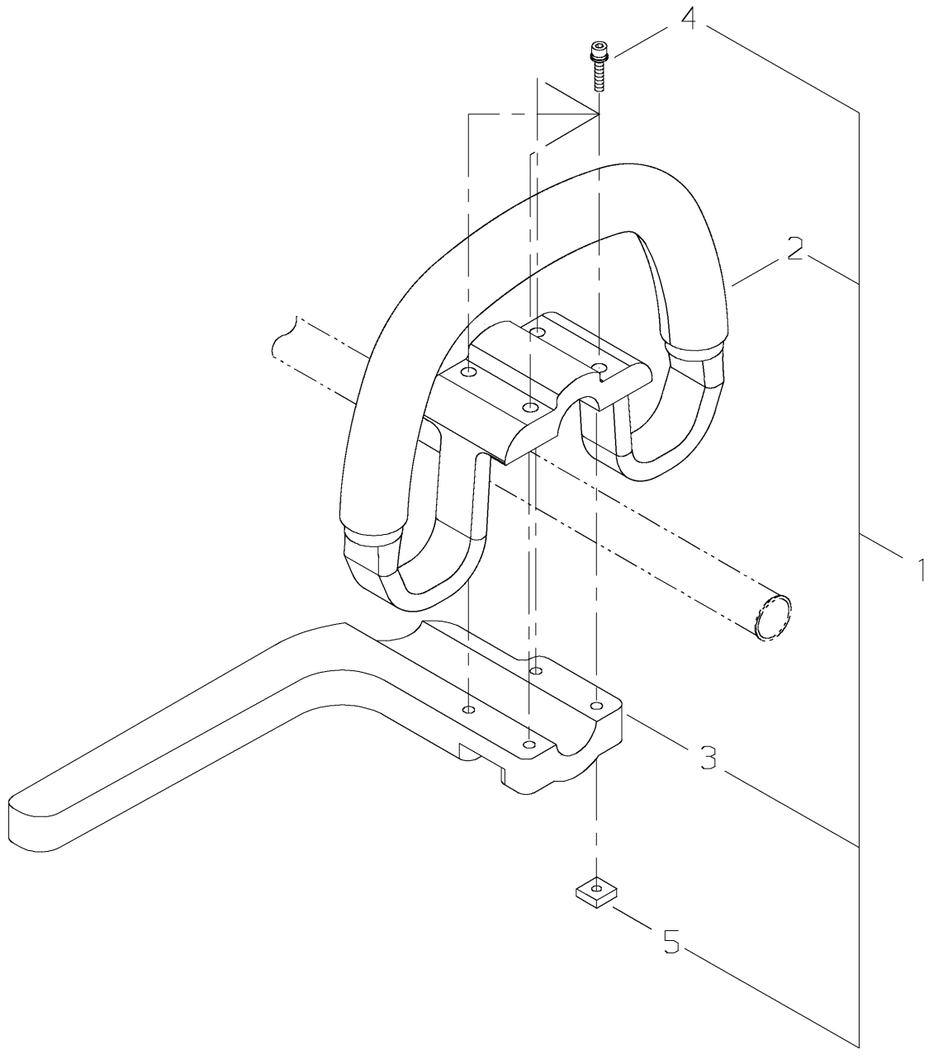
4
2
1
3
5

PRICE:($)

Ref. No.	Part No.	Part Name	Q`ty	Unit Price($)	Remarks
10-1	65011-64010	HANDLE ASSY	1		
2	62901-64112	*HANDLE	1		
3	65011-64120	*BARRIER	1		
4	11022-05350	*BOLT-SPW	4		M5*35 SPW
5	22420-16120	*NUT	4		

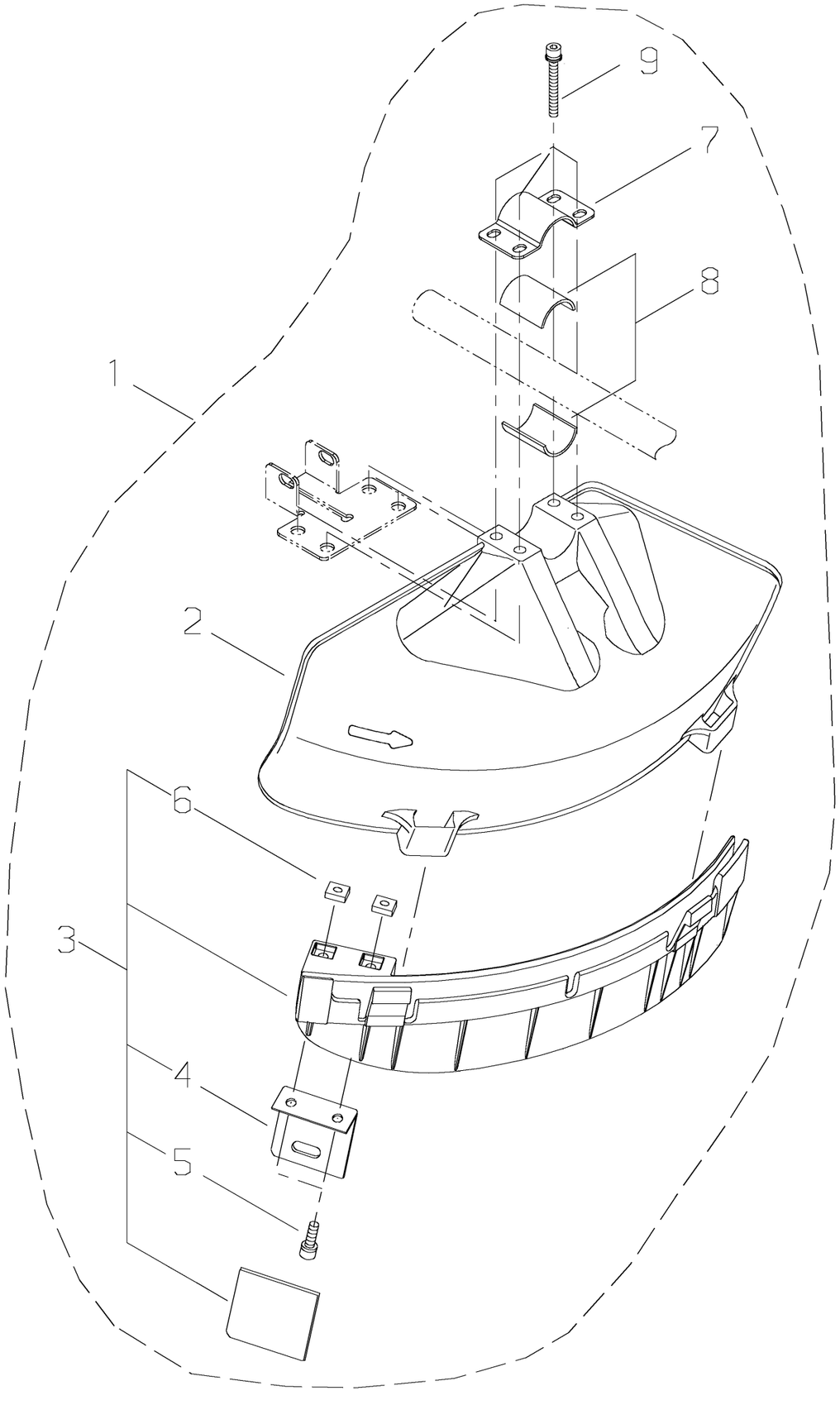
9
7
8
1
2
6
3
4
5

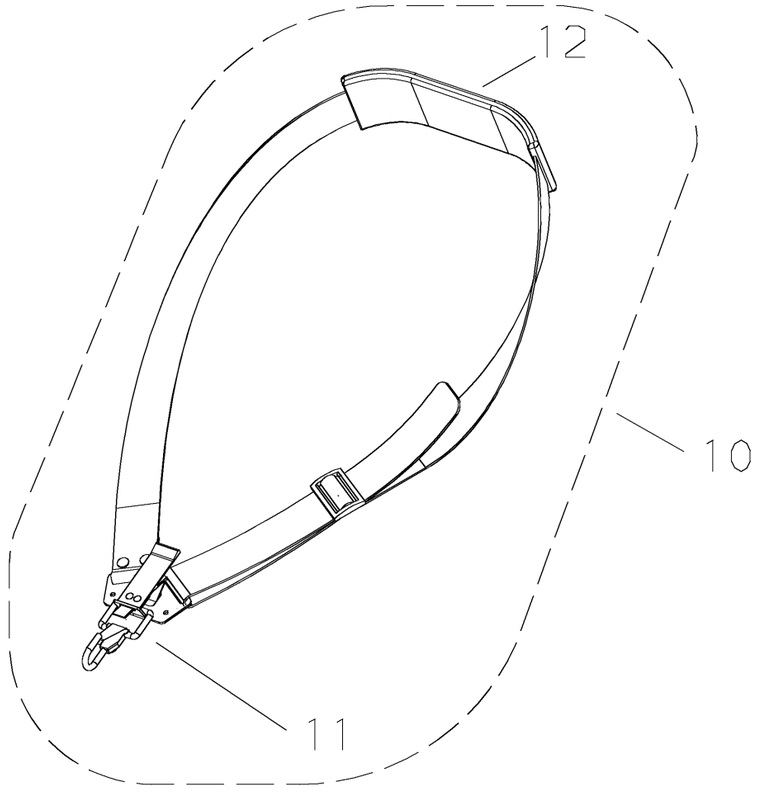
12
10
11

PRICE:($)

Ref. No.	Part No.	Part Name	Q`ty	Unit Price($)	Remarks
11-1	62903-66322	GUARD SET	1		
2	62903-66111	*GUARD	1		
3	62903-66332	*SUBGUARD ASSY	1		
4	72480-16121	**CUTTER	1		
5	11020-05160	**BOLT-SW	2		
6	22420-16120	**NUT	2		
7	72480-16210	*UPPER CLAMP	1		
8	72480-16220	*SPACER	2		
9	11022-05450	*BOLT-SPW	4		M5x45 SPW
10	22421-17202	STRAP ASSY	1		
11	22421-17130	*HOOK	1		
12	22007-17220	*PROTECTOR	1		

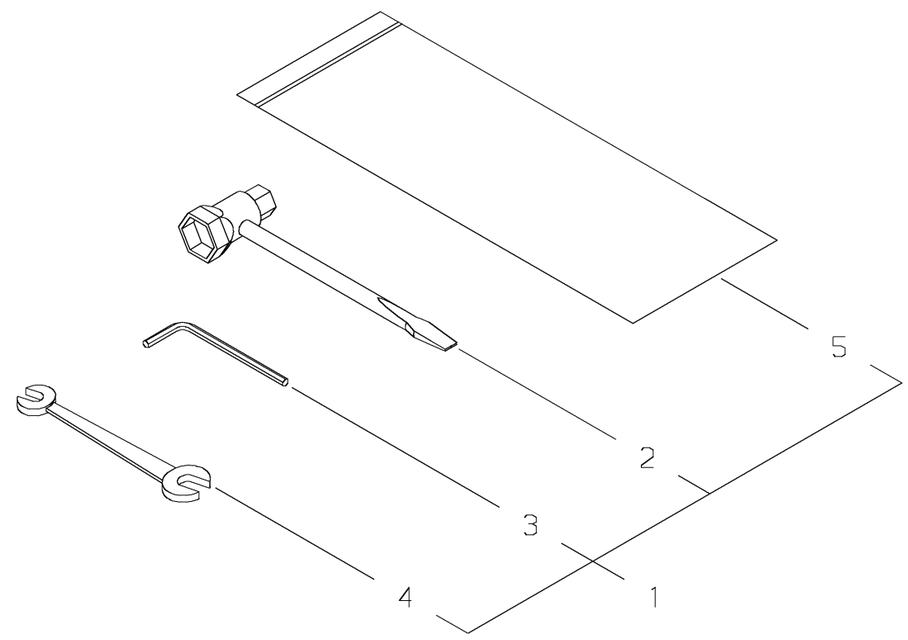
5
2
3
4
1

PRICE:($)

Ref. No.	Part No.	Part Name	Q`ty	Unit Price($)	Remarks
12-1	22410-91000	TOOL SET	1		
2	22000-91181	*PLUG WRENCH	1		
3	09026-04001	*HEXA-WRENCH	1		4mm
4	22000-91120	*SPANNER	1		
5	19639-01400	*POLY-BAG	1		

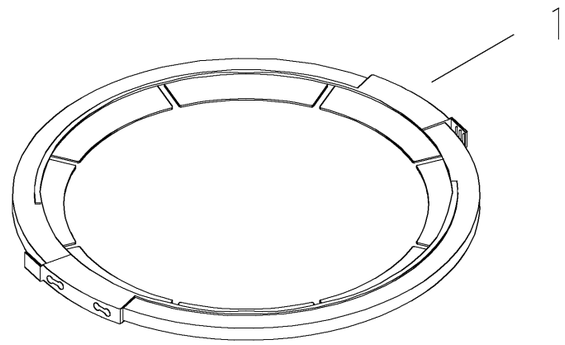
1

PRICE:($)

Ref. No.	Part No.	Part Name	Q`ty	Unit Price($)	Remarks
13-1	22550-92310	BLADE COVER	1		